Owner's manual

MONSTER

MONSTER 1100
MONSTER 1100 S

DUCATI

E

MONSTER

MONSTER 1100
MONSTER 1100 S

E

Welcome to the world of Ducati enthusiasts!
We congratulate you on your excellent choice of motorcycle. We are sure that you will use your Ducati for longer journeys as well as short daily trips, but however you use your motorcycle, Ducati Motor Holding S.p.A. wishes you an enjoyable ride.
Ducati Motor Holding S.p.A. recommends that you adhere strictly to the instructions in this manual, especially those regarding the running-in period. This will ensure that your Ducati motorcycle will continue to be a pleasure to ride.
For repairs or advice, please contact one of our authorized service centres.
We also provide an information service for all Ducati owners and enthusiasts for any advice and suggestions you might need.

Enjoy the ride!

Notes

Ducati Motor Holding S.p.A. cannot accept any liability for errors that may have occurred in the preparation of this manual. All information in this manual is valid at the time of going to print. Ducati Motor Holding S.p.A. reserves the right to make any modifications required due to the ongoing development of their products.

For safety and reliability, to avoid invalidating the warranty and to maintain the value of your motorcycle, use only original Ducati spare parts.

Warning

This manual is an integral part of the product and, if ownership is transferred to a third party, must always be passed to the new owner.

E

Table of contents

General indications 6
Warranty 6
Symbols 6
Useful road safety information 7
Riding with a full load 8
Identification data 9

Controls 10
Position of the motorcycle controls 10
Instrument panel 11
LCD – Main functions 13
LCD – How to set/display parameters 15
The immobilizer system 39
Code card 40
Immobilizer override procedure 41
Duplicate keys 43
Ignition switch and steering lock 44
Left-hand handlebar switch 45
Clutch lever 46
Right-hand handlebar switch 47
Throttle twistgrip 48
Front brake lever 48
Rear brake pedal 49
Gearchange pedal 49
Adjusting the position of the gearchange and rear brake pedals 50

Main components and devices 51
Position on motorcycle 51
Fuel tank filler cap 52
Seat lock and helmet holder 53
Sidestand 54
Front fork adjusters 55
Shock absorber adjusters 57

Riding the motorcycle 58
Running-in precautions 58
Pre-ride checks 59
Starting the engine 60
Moving off 62
Braking 63
Stopping the motorcycle 64
Refuelling 64
Parking 65
Toolkit and accessories 66

Main Maintenance Operations 67
Changing the air filter 67
Checking the brake and clutch fluid level 67
Checking the brake pads for wear 68
Lubricating cables and linkages 69
Adjusting the throttle cable 70

Charging and maintenance of the battery during winter storage 70
Removal of the battery 71
Refitting the battery 78
Tensioning the drive chain 89
Lubricating the drive chain 90
Changing bulbs 91
Headlight aim 92
Tyres 94
Checking the engine oil level 96
Cleaning and renewing the spark plugs 97
General cleaning 98
Storing the motorcycle 99
Important notes 99

Maintenance 100
Programmed maintenance plan: operations to be carried out by the dealer 100
Programmed maintenance plan: operations to be carried out by the customer 103

Technical data 104
Overall dimensions (mm) 104
Weights 104
Fluids and lubricants 105
Engine 106
Timing system 106
Performance data 107
Spark plugs 107
Fuel system 107
Brakes 108
Transmission 109
Frame 110
Wheels 110
Tyres 110
Suspension 110
Exhaust system 111
Colour schemes 111
Electrical system 111

Routine maintenance record 116

For United States of America Version Only 117
Reporting of safety defects 117
Safety warnings 117
Noise emission warranty 117
Noise and exhaust emission control system information 117
Tampering warning 118
Riding safety 119
Protective apparel 120
Vehicle identification number (VIN) 120
Label location 121
California evaporation emission system 123
Ducati limited warranty on emission control system 123

Routine Maintenance Record 126

E

E

General indications

Warranty

In your own interest, and in order to ensure the reliability of the motorcycle, you are strongly advised to contact a Ducati Dealer or Authorized Service Centre for any servicing that requires particular technical expertise.
Our highly qualified staff have access to the specialised tools required to perform any servicing job to the highest professional standards, using only Ducati original spare parts as the best guarantee for perfect interchangeability, smooth running and long life.

All Ducati motorcycles come with a Warranty Booklet. However, the warranty does not apply to motorcycles used in competitions. If any motorcycle part is tampered with, modified, or replaced with parts other than original Ducati spare parts during the warranty period, the warranty is automatically invalidated.

Symbols

Ducati Motor Holding S.p.A. advises you to read this manual carefully in order to familiarise yourself with your motorcycle. If in doubt, please contact a Ducati Dealer or Authorized Service Centre. The information in this manual will help ensure that your riding experience is trouble-free and enjoyable, and it will help you obtain top performance from your motorcycle for a long time. This booklet uses a set of symbols with special meanings:

Warning

Failure to comply with these instructions may put you at risk, and could lead to severe injury or even death.

Important

Risk of damage to the motorcycle and/or its components.

Notes

Additional information about the current operation.

References to the RIGHT or LEFT side of the motorcycle assume you are sitting on the seat, facing forward.

Useful road safety information

Warning

Read this section before riding your motorcycle.

Many accidents are the result of the inexperience of the rider.
Always make sure you have your licence with you; you need a valid licence that entitles you to ride a motorcycle.
Do not lend your motorcycle to persons who are inexperienced or do not hold a valid licence.
Riders and passengers must ALWAYS wear appropriate clothing and a safety helmet.
Do not wear loose clothes or accessories that could become tangled in the controls or limit your field of vision.
Never start or run the engine in enclosed space.
Exhaust gases are toxic and may lead to loss of consciousness or even death within a short time.
The rider should keep his/her feet on the footrests when the motorcycle is in motion.
ALWAYS hold the handlebars firmly with both hands so you will be ready for sudden changes in direction or in the road surface. The pillion passenger should ALWAYS hold on to the grabhandles under the seat with both hands.
Obey the legal requirements and observe national and local regulations.
Always respect speed limits where these are indicated and ALWAYS adapt your speed to suit the current visibility, road and traffic conditions.
ALWAYS signal your intention to turn or change lane in good time, using the appropriate turn signals.
Be sure you are clearly visible and avoid riding within the blind spot of a vehicle in front of you.
Be very careful at road junctions, or when riding in areas near exits from private land or car parks, or on the slip roads to motorways.
ALWAYS turn off the engine when refuelling. Be extremely careful not to spill fuel on the engine or on the exhaust pipe when refuelling.
Do not smoke when refuelling.
While refuelling, it is possible to inhale noxious fuel vapours.
Should any fuel drops be spilled on your skin or clothing, immediately wash with soap and water and change your clothing.
ALWAYS remove the key if leaving your motorcycle unattended.
The engine, exhaust pipes and silencers remain hot for a long time.

Warning

The exhaust system might be hot, even after engine is switched off; take special care not to touch exhaust system with any body part and do not park the motorcycle next to inflammable material (wood, leaves, etc.).

Park your motorcycle where no one is likely to knock against it, and use the sidestand.
Never park on uneven or soft ground, or your motorcycle may fall over.

Riding with a full load

Your motorcycle is designed for travelling over long distances with a full load in complete safety.
Even weight distribution is critical for maintaining safety standards, and to avoid getting into difficulties when making sudden manoeuvres or riding on bumpy roads.

Information on load capacity

The total weight of the motorcycle in running order with rider, luggage and additional accessories should not exceed 390 kg.

Arrange your luggage or heavy accessories in the lowest possible position and as close to centre of the motorcycle as possible.
Secure the luggage firmly to the motorcycle structure.
Luggage incorrectly secured may cause the motorcycle to become unstable.
Never attach bulky or heavy objects to the top yoke or front mudguard, as this would cause dangerous instability.
Do not insert objects into gaps in the frame, where they could interfere with moving parts.
Check that the tyres are inflated to the pressure indicated on page 94 and that they are in good condition.

Identification data

All Ducati motorcycles have two identification numbers, one for the frame (fig. 1) and one for the engine (fig. 2).

Frame number

Engine number

Notes

These numbers indicate the motorcycle model and should be quoted when ordering spare parts.

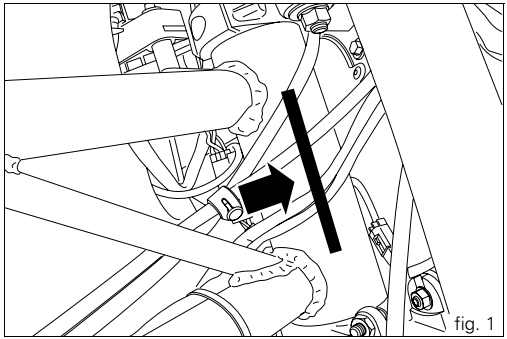

fig. 1

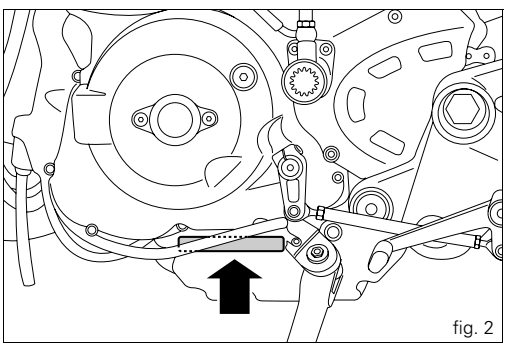

fig. 2

Controls

Warning
This section shows the position and function of the controls used to drive the motorcycle. Be sure to read this information carefully before you use the controls.

Position of the motorcycle controls (fig. 3)

1) Instrument panel.
2) Key-operated ignition switch and steering lock.
3) Left-hand handlebar switch.
4) Clutch lever.
5) Right-hand handlebar switch.
6) Throttle twistgrip.
7) Front brake lever.
8) Gearchange pedal.
9) Rear brake pedal.

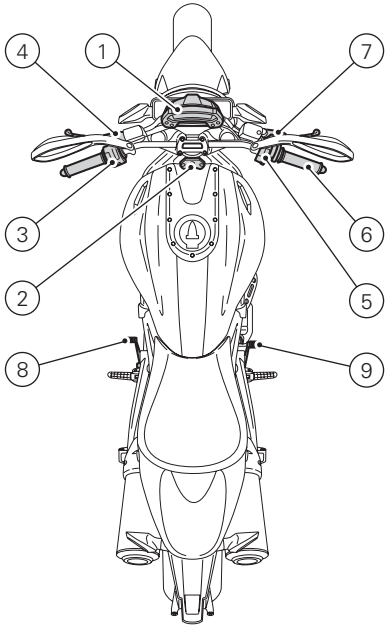

fig. 3

Instrument panel (fig. 4)

1) LCD (see page 13).

2) TACHOMETER (rpm).
Indicates engine revs per minute.

3) NEUTRAL (N) INDICATOR (GREEN).
Illuminates when the gearbox is in neutral.

4) FUEL WARNING LIGHT (YELLOW).
Illuminates when there are approximately 3 litres of fuel left in the tank.

5) TURN SIGNAL INDICATOR LIGHT (GREEN).
Illuminates and flashes when the turn signal is in operation.

6) ENGINE OIL PRESSURE WARNING LIGHT (RED).
Illuminates when engine oil pressure is too low. This light should illuminate when the ignition is switched to ON and should go out a few seconds after the engine starts.

Important

If this light (6) stays on, stop the engine to avoid serious damage.

7) HIGH BEAM WARNING LIGHT (BLUE).
Illuminates when the high beam headlight is on.

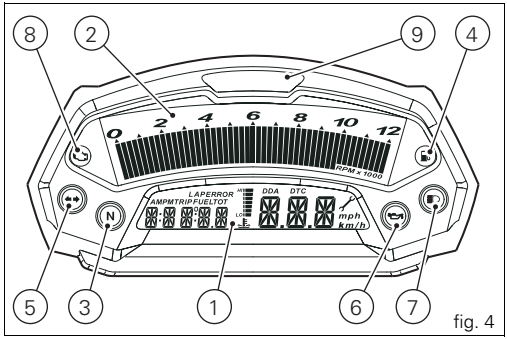

fig. 4

8) "EOBD ENGINE DIAGNOSTICS LIGHT" (AMBER).
The engine ECU illuminates this light steadily to indicate the presence of errors leading to engine lock.

9) OVER REV. INDICATOR LIGHTS.
Illuminates steadily at 800 rpm before intervention of the rev limiter. Starts flashing when the rev limiter is reached.

E

10) SELECTION SWITCH.
Switch used for displaying and setting instrument panel parameters. It has two positions, A "▲" and B "▼".
11) HIGH BEAM HEADLIGHT FLASHER SWITCH (fig. 5).
The high beam headlight flasher switch is also used for the LAP and USB data aquisition functions.

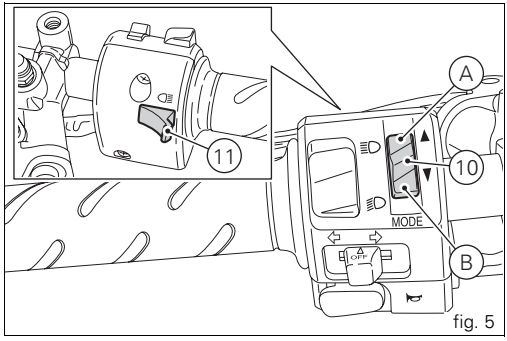

fig. 5

LCD – Main functions

Warning

Any adjustments to the instrument panel must only be carried out when the motorcycle is stationary. Never operate the instrument panel controls while riding the motorcycle.

1) SPEEDOMETER.
Indicates road speed.

2) ODOMETER.
Shows total distance travelled.

3) TRIP METER.
Indicates the distance travelled since last reset.

4) FUEL RESERVE TRIP COUNTER.
Shows distance travelled on reserve fuel.

5) CLOCK.

6) LAP TIME.

7) REV COUNTER (RPM).

8) LAP TIME.

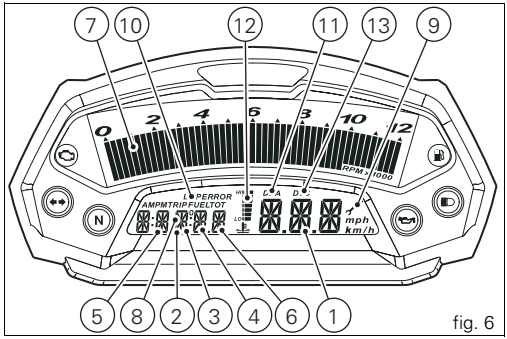

fig. 6

9) SERVICE INDICATOR (fig. 6).
The indicator illuminates to signal when a service is due. The service indicator will remain on the display until the system is reset by the Ducati Dealer or authorised Service Centre who carry out the service.

10) LAP FUNCTION (fig. 6).
Indicates that the LAP has been activated.

11) DDA FUNCTION (fig. 6).
Indicates that the Ducati Data Analyzer (DDA) has been activated.

Important
The instrument panel incorporates diagnostic functions for the electronic injection/ignition system. The related menus are for use by trained personnel only. If you accidentally access this function, turn the key to OFF and have the motorcycle checked at contact your Ducati dealer or authorised Service Centre.

12) OIL TEMPERATURE INDICATOR (fig. 6).

Important
Stop riding if the temperature reaches the maximum value, otherwise the engine might be damaged.

13) DUCATI TRACTION CONTROL (DTC) (fig. 6).
Indicates activation of the DTC control unit (if present).

LCD – How to set/display parameters

At key-on (key turned from OFF to ON) the instrument panel activates all the digits of the LCD for 1 second and switches on the indicator lights in sequence.

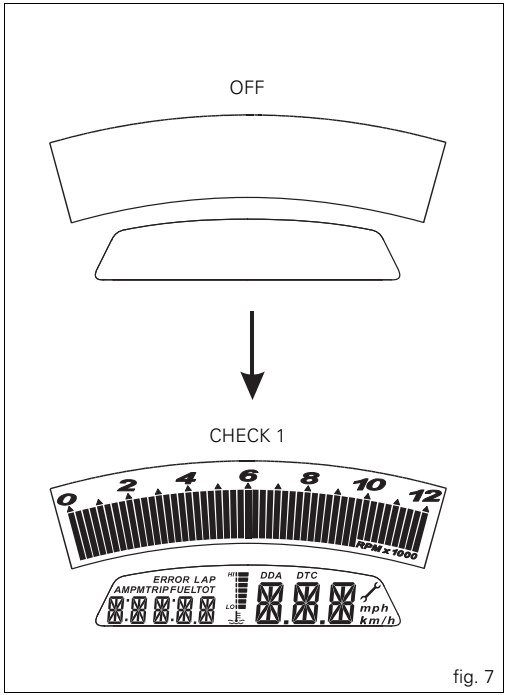

fig. 7

It then reverts to “normal” mode and, in place of the motorcycle speed, shows the model and, for 2 seconds, also the version (EU, UK, USA, CND, FRA, JAP).
The model is scrolled on the display once only.

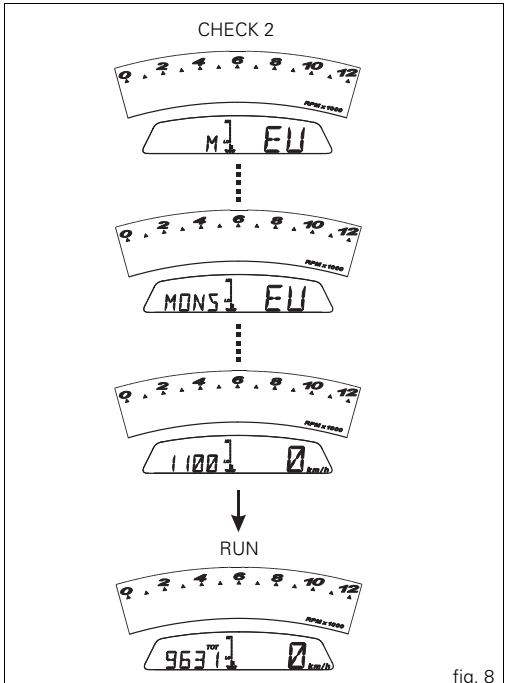

fig. 8

At Key-On, the instrument panel always shows the following information (de-activating any previously activated functions):
ODOMETER
SPEED
ENGINE RPM BARGRAPH
ENGINE OIL TEMPERATURE BARGRAPH

At this point, with button (1, fig. 9) in position B "▼" it is possible to switch from the odometer display function to the following functions:
TRIP
TRIP FUEL (only if active)
CLOCK
before returning to TOT (odometer function).

If, however, you press switch (1, fig. 9) in position A "▲", the system enters MENU mode and displays the following functions in sequence:
ERROR (only if active)
BATT
RPM
LIGHT SET
LAP (OFF or ON)
LAP MEM
DDA (OFF or ON)
ERASE DDA
TIME SET
CODE (only if active)

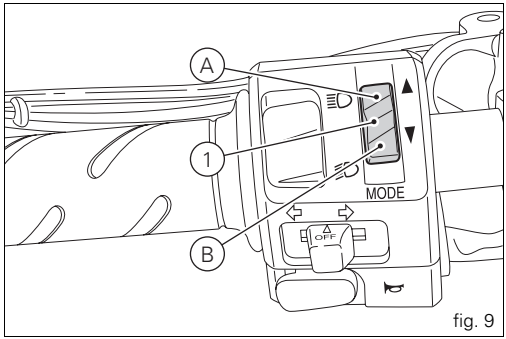

fig. 9

Important

This menu is active only if the speed of the motorcycle is less than 20 km/h. If this menu is on the display and the speed of the motorcycle exceeds 20 km/h, the instrument panel automatically exits the menu and returns to the initial display. It is possible to exit the menu at any time, however, by pressing switch (1, fig. 9) in position A "▲" for 3 seconds.

E

Total distance travelled indicator (odometer)

At Key-On the system automatically enters this function.
The reading is saved permanently and cannot be reset under any circumstances.
If it exceeds 99999 km (or 99999 miles), the reading "99999" remains displayed permanently.

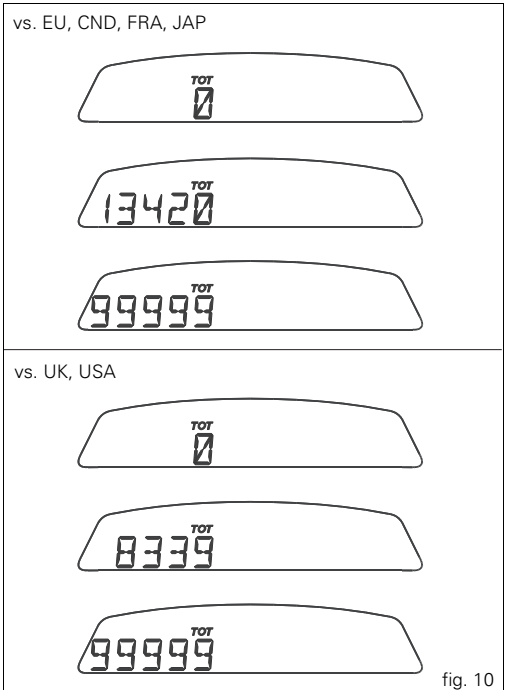

fig. 10

“Speed” indicator

This function enables display of the motorcycle speed.
The dashboard receives actual speed value (expressed in km/h) from the control unit and displays the value increased by 8%.
The maximum speed that can be displayed is 299 km/h (186 mph).
Over 299 km/h (186 mph) the display will show a series of dashes “- - -” (steadily lit - not flashing).

vs. EU, CND, FRA, JAP

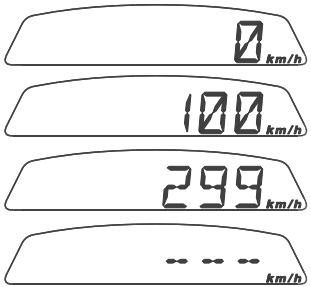

vs. UK, USA

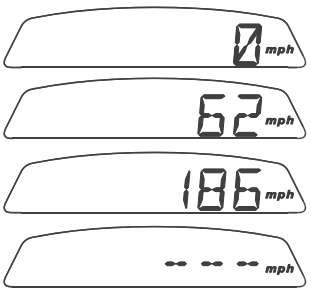

fig. 11

E

"TRIP" meter

While in this function, if you press switch (1, fig. 9) in position B "▼" for 3 seconds, the reading is reset. If the reading exceeds 999.9, it is reset to zero and the count restarts automatically.

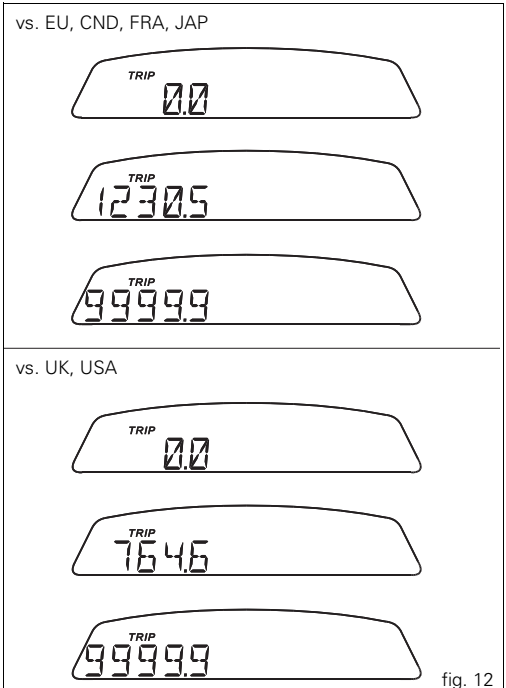

fig. 12

"TRIP FUEL" (distance travelled on reserve fuel) indicator

When the fuel warning light comes on, the TRIP FUEL meter is activated automatically, regardless of the function displayed. If the fuel level remains in reserve, the reading is saved even after Key-Off.
The count stops automatically when the fuel level rises above reserve.
If the reading exceeds 999.9, it is reset and the count restarts automatically.

vs. EU, CND, FRA, JAP

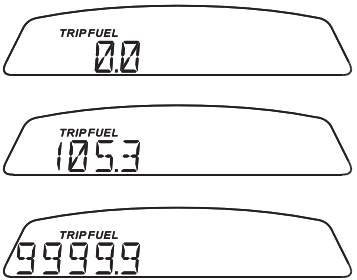

vs. UK, USA

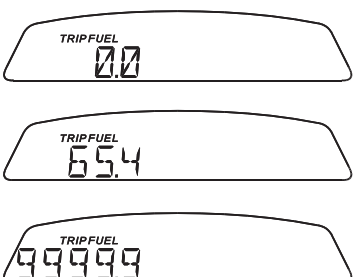

fig. 13

E

Oil temperature indicator

This function displays the engine oil temperature.

Display indications:
- if the temperature is between -40 °C and +80 °C, the display shows “STATUS 2”;
- if the temperature is between +81 °C and +110 °C, the display shows “STATUS 3”;
- if the temperature is between +111 °C and +135 °C, the display shows “STATUS 4”;

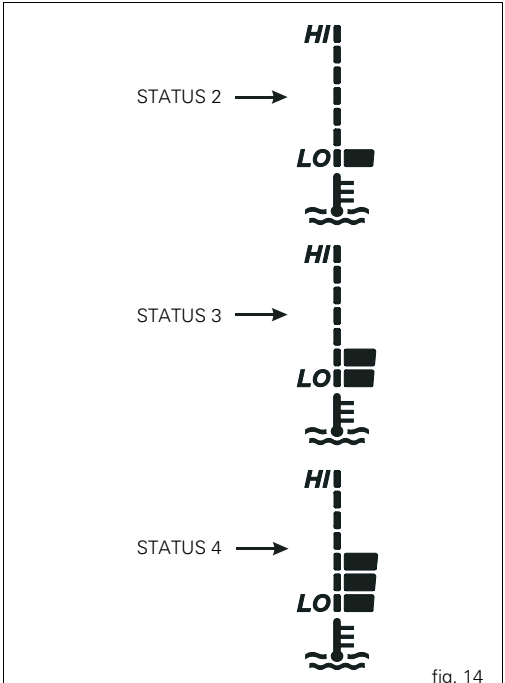

fig. 14

- if the temperature is between +136 °C and +160 °C, the display shows “STATUS 5”;
- if the temperature is between +161 °C and +175 °C, the display shows “STATUS 6”;
- if the temperature is between +176 °C and +190 °C, the display shows “STATUS 7”;

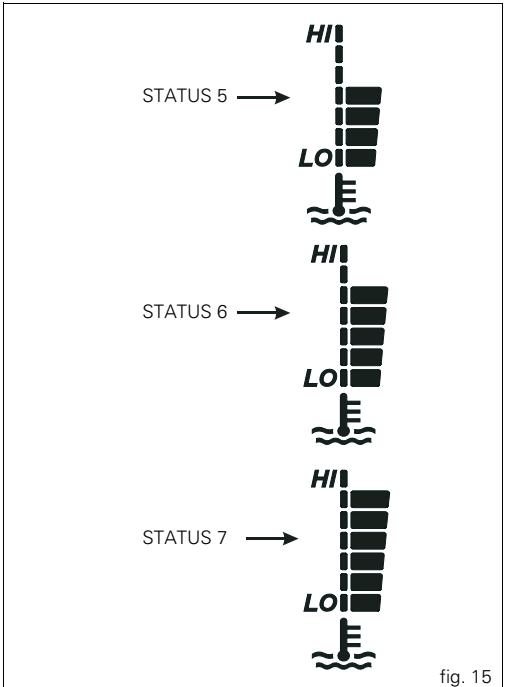

fig. 15

- if the temperature is between +191 °C and +200 °C, the display shows “STATUS 8”;
- if the temperature is ≥ 201 °C the display shows “STATUS 9” with the series of dashes flashing;

- in the event of a FAULT with the sensor, the display will flash “STATUS 1”.

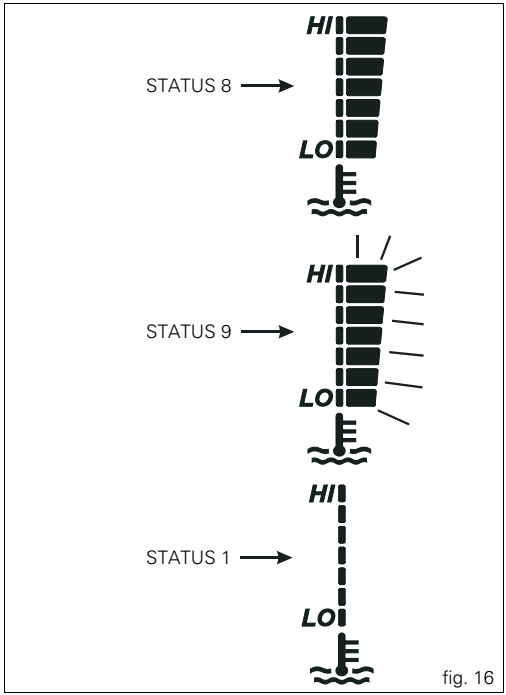

fig. 16

Service indicator

Indicates that the next service is due.
The indicator (🔧) signals when the next service is due.
The service indicator is displayed at the following intervals:
- after the first 1000 km on the odometer;
- every 12000 km on the odometer.

The service indicator will remain on the display until reset.
When the service indicator appears, contact your Ducati dealer or Authorized Service Centre.

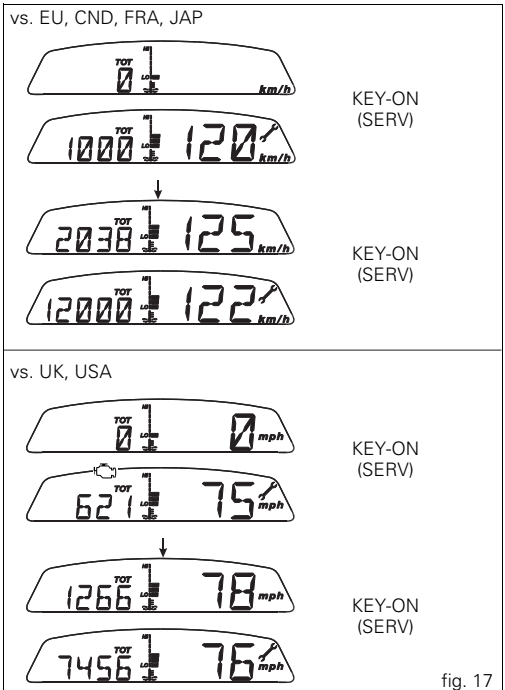

fig. 17

Battery voltage indicator (BATT)

To display this function, go into the menu and select the "BATT" page.

The battery voltage reading is displayed as follows:

- if the reading is between 12.1 and 14.9 Volts, it remains lit steadily;
- if the reading is between 10.0 and 12.0 Volts or between 15.0 and 16.0 Volts, it flashes on the display.;

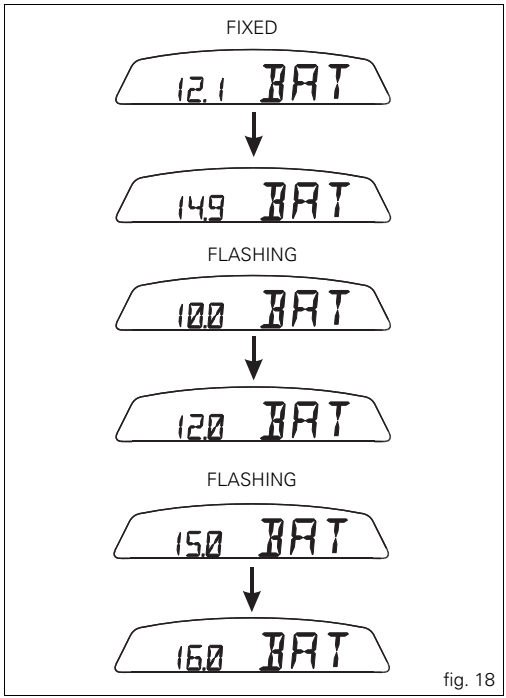

fig. 18

- if the reading is less than or equal to 9.9 Volts, the message “LO” flashes on the display and the “EOBD engine diagnostics” warning light (8, fig. 4) comes on;
- if the reading is greater than or equal to 16.1 Volts, the message “HI” flashes on the display and the “EOBD engine diagnostics” warning light (8, fig. 4) comes on.

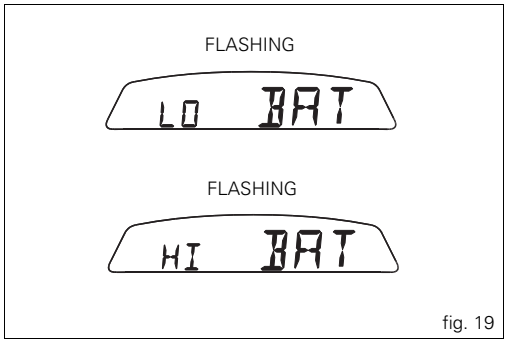

fig. 19

Adjusting the engine idle speed (rpm)

To display the function, access the menu and select the "RPM" page.
In addition to the upper rev counter scale, the display also shows engine rpm numerically so that you can adjust the idle speed more precisely.

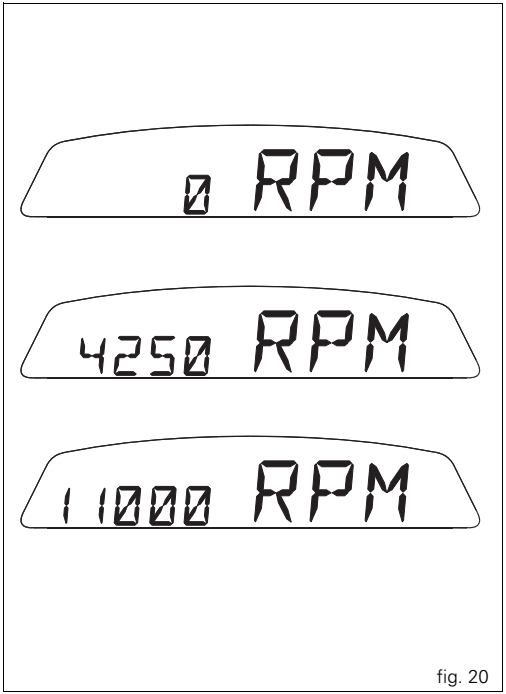

fig. 20

Display backlighting adjustment

To adjust the backlighting, enter the menu and select the "LIGHT SET" page.

While in this page, press switch B (▼) for 3 seconds to enable adjustment and display the following pages in sequence:

- page 1 - "LIGHT MAX" setting:
This page sets backlighting to maximum brightness; press switch B (▼) to move to page 2.

- page 2 - "LIGHT MID" setting:
This page reduces the backlighting by approximately 30% relative to maximum brightness; press switch B (▼) to return to page 3.

- page 3 - "LIGHT MIN" setting:
This page reduces the backlighting by approximately 70% relative to maximum brightness; press switch B (▼) to return to page 1.

In each of the three pages, pressing B for 3 seconds will select the corresponding backlighting brightness, saving it memory, and return you to the "LIGHT SET" page.

In the event of an interruption of the power supply from the battery, when power is restored at the next Key-On, the backlighting will be set by default to maximum brightness.

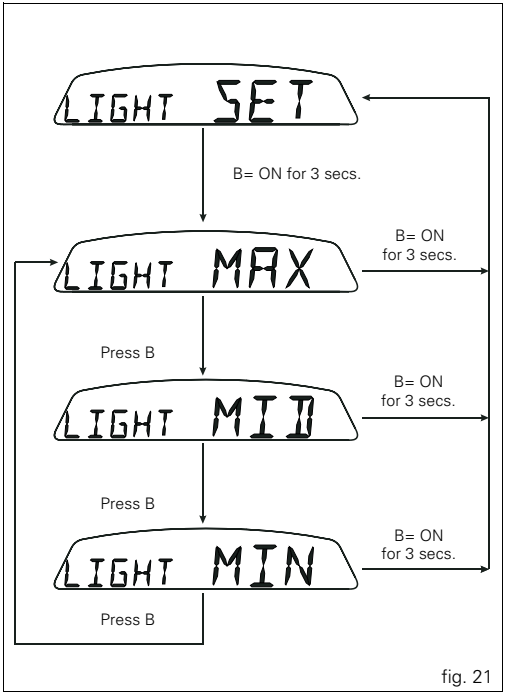

fig. 21

E

LAP time display function

To activate this function, go into the menu and set the "LAP" function to "On" by pressing switch (1, fig. 9) in position B "▼" for 3 seconds.
START and STOP the timer by pressing the high beam FLASH button (11, fig. 5) on the left-hand handlebar switch.
When the LAP function is active, each time you press the flasher switch, the display will show the lap time for 10 seconds, before reverting to normal mode.
You can save a maximum of 30 laps in the memory.
If the memory is full, each time you press the flasher switch, the display will not save any more lap times and will display the flashing message "FULL" for 3 seconds until the memory is reset.

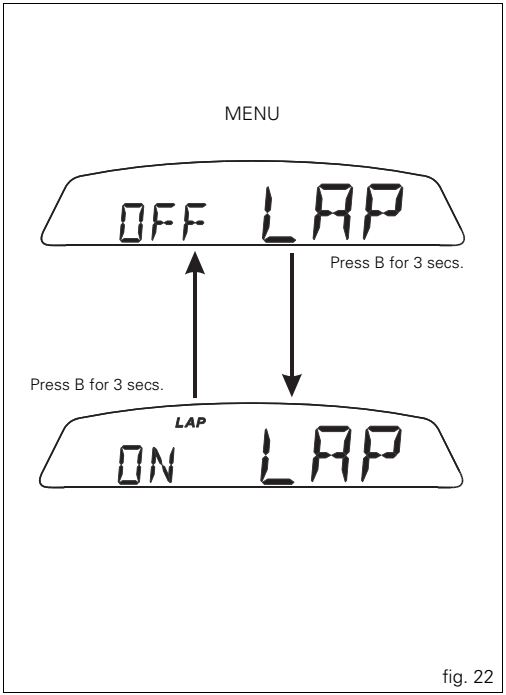

fig. 22

When you switch the LAP function off from the menu, the lap in progress will not be saved.
If the LAP function is active and the display is suddenly switched off (Key-Off), the LAP function is switched off automatically (even if the timer was ON, the lap in progress is not saved).
If the timer is not stopped, when it reaches 9 minutes, 59 seconds and 99 hundredths of a second, it restarts from 0 (zero) and continues until the function is switched off.
If however the LAP function is switched on and the memory has not been cleared, but fewer than 30 laps have been saved (e.g. 18 laps), the display will save any remaining laps until the memory is full (in this case, it will save a further 12 laps).
This function only displays lap times once; however, lap times are saved for subsequent display in the Lap Memory function.

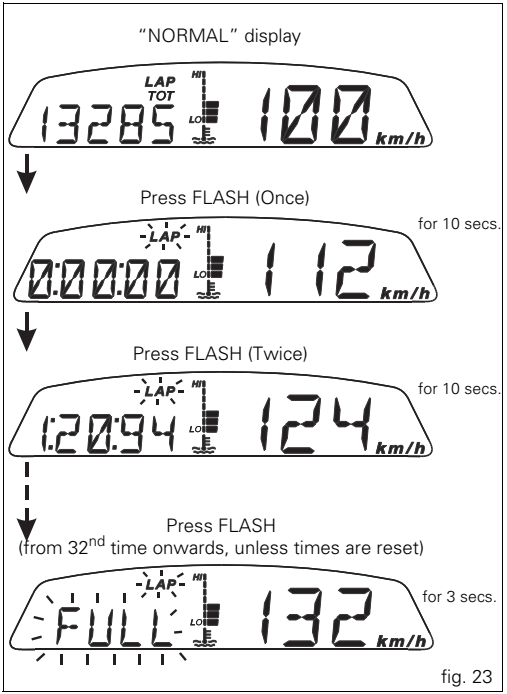

fig. 23

E

LAP Memory display

Displays the data saved with the LAP function: lap number and time.
To display the saved lap times, enter the menu and select the "LAP MEM" page.
From this page, if you press switch (1, fig. 9) in position B "▼" for 3 seconds, the data for the first lap will appear.
The display will show the lap number, lap time, MAX speed and the MAX rpm reached for the lap in question.
If you press switch (1, fig. 9) in position B "▼", the display scrolls through the 30 saved times, before returning to the 1st lap.
If you hold button (1, fig. 9) in position B "▼" for 3 seconds while the saved times are displayed, the display immediately resets all the saved times. In this case, if the LAP function was active, it is switched off automatically.
The MAX speed saved is the maximum speed indicated on the display in Lap function.
To exit display of the lap times memory, press switch (1, fig. 9) in position A "▲".
If no lap times are saved in memory, all 30 lap times will be displayed as "0.00.00".
If the engine trips the rev limiter during a lap, the "OVER REV. LIMITER" indicator light will come on during display of the lap time (9, fig. 4).

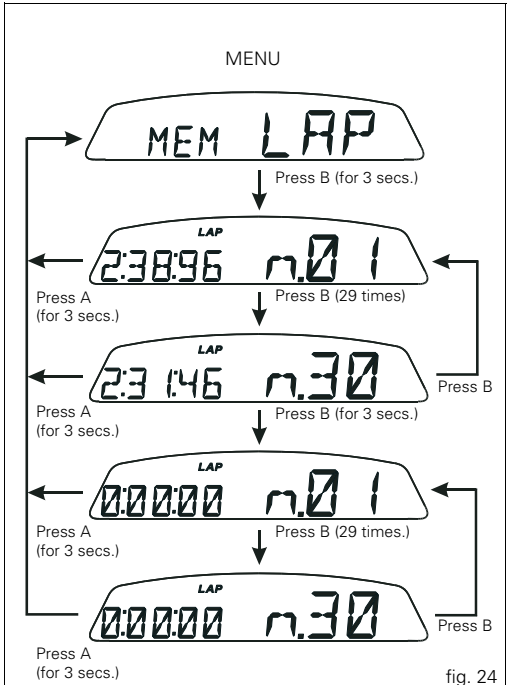

fig. 24

DDA data acquistion

This function serves to activate the DDA (Ducati Data Analyzer): the DDA must be connected to the motorcycle wiring.
To activate the DDA, go into the menu and set the "DDA" to "On" by pressing switch (1, fig. 9) in position B "▼" for 3 seconds.
START and STOP the lap separator by pressing the high beam FLASH button (11, fig. 5) on the left-hand handlebar switch.
If the DDA function is active and the display is suddenly switched off (Key-Off), the function is switched off automatically.

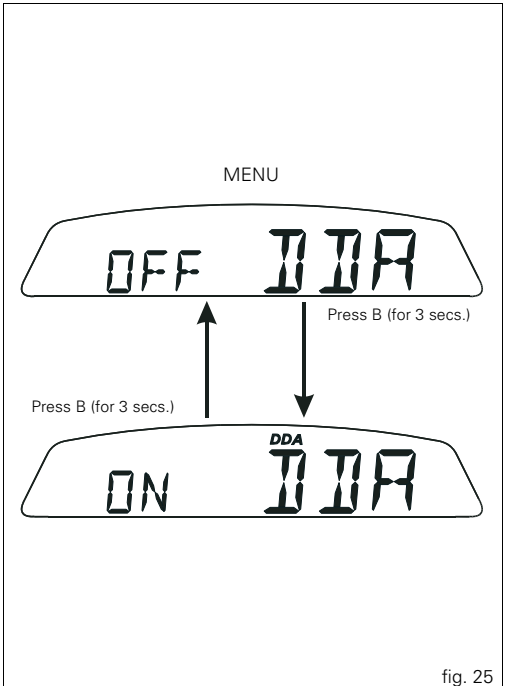

fig. 25

Erase DDA

This function enables you to delete the data saved on the DDA: the DDA must be connected to the motorcycle wiring. To delete the data, enter the menu and select the "Erase DDA" page.
If you press the switch (1, fig. 9) in position B "▼" for 3 seconds and the DDA is not acquiring data, the message "WAIT…" appears on the display for 10 seconds. After 10 seconds, the message "ERASE OK" appears for 3 seconds, to confirm that the data has been deleted.

If you press the switch (1, fig. 9) in position B "▼" for 3 seconds and the DDA is acquiring data, the DAQ memory is not cleared and the display shows the message "FAIL" for 3 seconds.

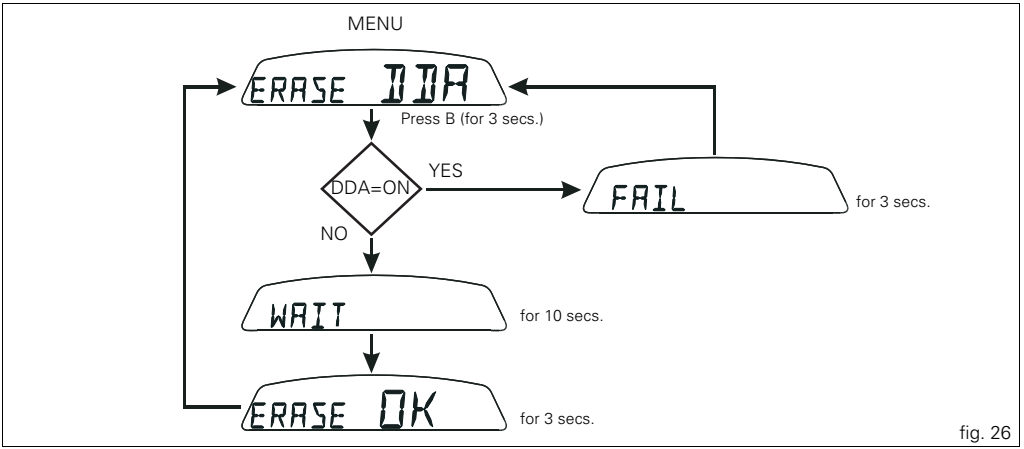

fig. 26

Clock setting function

To set the clock, enter the menu and select the "SET" page. From this page, if you press switch (1, fig. 9) in position B "▼" for 3 seconds, you enter clock setting mode.
On entering this function, the message "AM" flashes on the display; if you press switch (1, fig. 9) in position B "▼", the message "PM" flashes on the display; pressing switch (1, fig. 9) in position B "▼" as second time returns you to the previous step (if the time is 00:00, when you switch from AM to PM the time 12:00 will appear);
if you press the switch (1, fig. 9) in position A "▲", you can set the hours, which start flashing. Each time you press the switch in position B "▼", the hours digit increases cyclically in steps of 1 hour; hold the switch pressed down in position B "▼" to scroll faster through the hours in steps of 1 hour every second (when the switch is held pressed continuously, the hour digits do not flash);
if you press switch (1, fig. 9) in position A "▲", you enter the minutes setting mode and the minute digits will start flashing. Each time you press the switch in position B "▼", the minutes increase cyclically in steps of 1 minute; hold the switch pressed in position B "▼" to scroll faster through the minutes in steps of 1 minute every second. If the switch is held pressed in position B "▼" for more than 5 seconds, the minutes advance by 1 every 100 ms (when the switch is held in position B "▼" continuously, the seconds do not flash).
if you press the switch in position A "▲", the system exits setting mode and displays the newly set time.

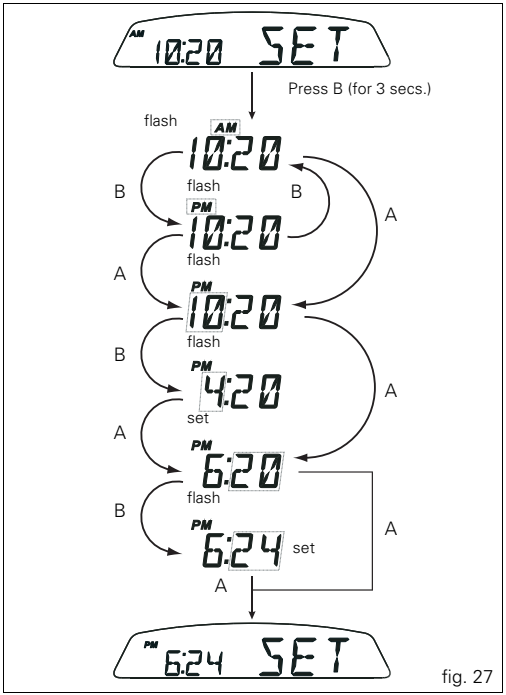

fig. 27

Instrument panel diagnostics

Important

The instrument runs the system diagnostics correctly 60 seconds after the last Key-Off.

This function allows you to display and identify malfunctions of the motorcycle and, where possible, renew components identified as faulty.

To display this function, enter the menu and select the "Error" page.
This menu is only present if at least one error is detected, otherwise this page will NOT appear.

If there are several errors, they are displayed in rolling mode every 3 seconds.
In any case, a more detailed diagnosis can be obtained using the Ducati Diagnostic System.

Warning

Every time an error is displayed, always contact your Ducati dealer or authorised Service Centre.

ERROR MESSAGE		ERROR
	TPS	Throttle position sensor
	PRESS	Pressure sensor
	T OIL	Oil temperature sensor
	BATT	Battery voltage LOW - HIGH
	LAMB	Lambda sensor and/or Lambda heater
	FUEL	Fuel reserve sensor

ERROR MESSAGE		ERROR
	COIL	Horizontal and/or vertical cylinder coil
	INJET	Horizontal and/or vertical cylinder injector
	START	Starter contactor
	R INJ	Injection relay
	STEPP	Stepper motor
	EXVL	EXVL – Exhaust valve motor
	PKUP	Pickup sensor
	SPEED	Speed sensor (if present)
	IMMO	Immobilizer (Key missing or antenna disconnected or key not recognised)
	CAN	CAN line (Communication between ECU and instrument panel)
	LIGHT	Lights relay

Intelligent headlight switch-off

This function helps reduce battery use by automatically switching off the headlight. The device is triggered in 3 cases:

- in the first case, if you turn the key from OFF to ON and do not start the engine within 60 seconds, the headlight is turned off and will be turned on again only when the engine is next switched on;
- in the second case, after the normal use of the motorcycle with the lights on, if the engine is stopped using the RUN-STOP on the right-hand handlebar switch. In this case, the headlamp is switched off 60 seconds after the engine is switched off, and only switched on again the next time the engine is started;
- in the third case, the headlight is switched off while the engine is being started and switched back on again when the engine is running.

Intelligent headlight switch-on

This function allows programmed activation of the headlight even with the motorcycle off (Key-Off).
Immediately after key-off, the instrument panel remains active for 60 seconds, thus allowing the headlight to be switched on if switch (1, fig. 9) is pressed in position B "▼" or A "▲".
During these 60 seconds, each time the switch (1, fig. 9) is pressed in position A "▲" or B "▼", the instrument panel will activate the headlight for 30 seconds; each press of the switch will add to the headlight activation time, up to a maximum of 6 presses (equivalent to a maximum activation time of 180 seconds).
After the first time you press the switch (1) in position A "▲" or B "▼", the period of 30 seconds starts, thus switching on the headlight. Further switch-on time can be added only if you press the switch again within these 30 seconds.
If the 30 seconds have elapsed, no further multiples of 30 seconds can be added, and the instrument panel will switch off the headlight.
To reset this function, you must perform at least one Key-On/ Key-Off.
If the battery power is interrupted at any time while this function is active, when power is restored, the instrument panel will de-activate the function (the instrument panel does not remain active for 60 seconds).

The immobilizer system

For additional anti-theft protection, the motorcycle is equipped with an IMMOBILIZER, an electronic system that locks the engine automatically whenever the ignition switch is turned off.
The grip of each ignition key contains an electronic device that modulates the output signal from a special antenna in the switch when the ignition is switched On. The modulated signal represents the "password" (which is changed at each start-up) by which the ECU recognizes the ignition key. The ECU will only allow the engine to start if it recognises this password.

Keys (fig. 28)

The owner receives a set of keys, comprising:
- 2 black keys (B).

These contain the "code" of the immobilizer system.

Notes

Your Ducati dealer may ask you to produce your Code Card in order to carry out certain servicing operations.

The black keys (B) are the keys for normal use, and are used to:
- start the engine;
- open the lock on the fuel tank filler cap;
- open the seat lock.

Notes

The two keys have a small tag (1) attached, which shows their identification number.

Warning

Keep the keys separately and use only one of the black keys to start the motorcycle.

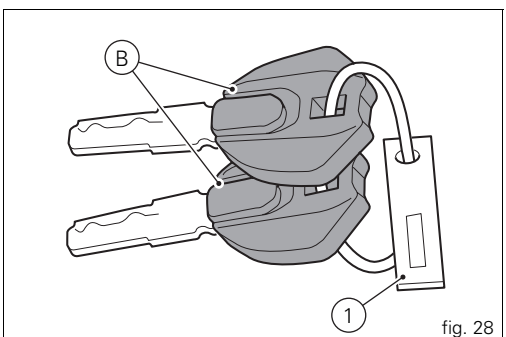

fig. 28

E

Code card

A CODE CARD (fig. 29) is supplied with the keys, showing the electronic code (A, fig. 30) that must be used if the engine is locked by the immobilizer and consequently does not start at the next KEY-ON.

Warning

Keep the CODE CARD in a safe place. We advise the user to keep the code printed on the CODE CARD on his/her person at all times in order to be able to override the engine lock using the procedure described below, in the event of a malfunction of the immobilizer system, signalled by illumination of the amber “EOBD – Engine diagnosis” light (8, fig. 4).
This operation is only possible if the electronic code indicated on the code card is known.

Warning

Your dealer will ask you to produce the Code Card in order to re-program or replace a key.

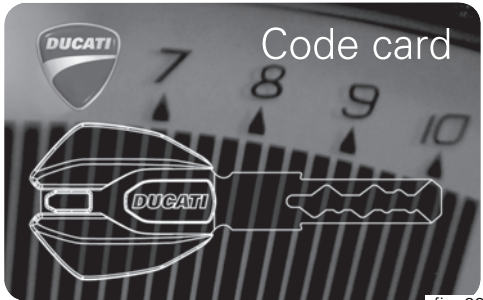

fig. 29

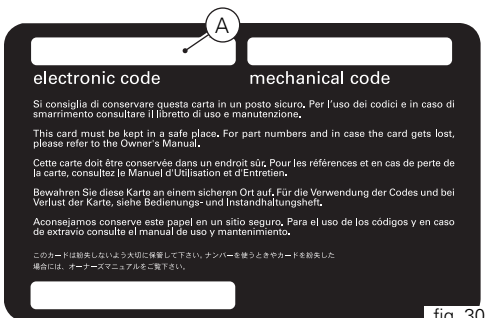

fig. 30

Immobilizer override procedure

Should the immobilizer become locked, you can perform the "Immobilizer Override" procedure from the instrument panel by entering the respective function as follows.
Select the "CODE" page from the menu.

Notes

This menu should be active only if there is at least one immobilizer error.

With this page selected, the initial code is always displayed as "00000". If you hold the button (1, fig. 9) in position B "▼" for 3 seconds, you will access the procedure for entering the electronic code given on the Code Card.

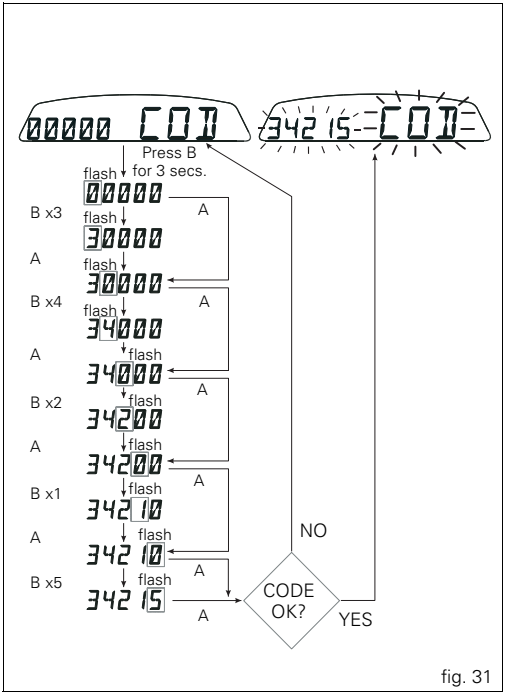

fig. 31

Entering the code:
- on entering this function, the first digit on the left starts flashing.

Switch (1, fig. 9):
- each time you press the switch in position B "▼", the number increases cyclically in steps of one digit every second;
- if you press the switch in position A "▲", you can set the second digit, which will start flashing. Each time you press the switch in position B "▼", the number increases cyclically in steps of one digit every second;
- if you press the switch in position A "▲", you can set the third digit, which will start flashing. Each time you press the switch in position B "▼", the number increases cyclically in steps of one digit every second;
- if you press the switch in position A "▲", you can set the fourth digit, which will start flashing. Each time you press the switch in position B "▼", the number increases cyclically in steps of one digit every second;
- if you press the switch in position A "▲", you can set the fifth digit, which will start flashing. Each time you press the switch in position B "▼", the number increases cyclically in steps of one digit every second;
- press in position A "▲" to confirm the code.

If the code has been entered correctly, the message CODE and the code itself will flash simultaneously for 4 seconds. The "EOBD engine diagnosis" warning light (8, fig. 4) will go off. The instrument panel then automatically exits the menu, thus allowing "temporary" starting of the motorcycle.
If the error persists, at the next key-on, the instrument panel will return to an error state and immobilize the engine.
If instead the code has been entered incorrectly, the instrument panel will automatically return to the "CODE" menu and display the code "00000".

Operation

When the ignition key is turned from ON to OFF, the immobilizer system activates the engine lock. When the ignition key is turned from OFF to ON to start the engine:

1) if the code is recognised, the protection system releases the engine lock. When you press the START (2, fig. 35) switch, the engine will start up.
2) if the "EOBD engine diagnosis" warning light (8, fig. 4) comes on and if, when you press the switch (10, fig. 5) in the "▼" position, the "Error IMMO" message appears on the display, indicating that the code has not been recognised. In this case, turn the ignition key back to OFF and then to ON again. If the engine still does not start, try again with the other black key. If the engine still does not start, contact the DUCATI Service network.

Warning

Sharp knocks can damage the electronic components inside the key.
Always use the same key throughout the procedure. Using different keys could prevent the system from recognising the code in the key.

Duplicate keys

If you need additional keys, contact your DUCATI Service Centre with all the keys you have in your possession and your CODE CARD.
The Ducati Service Centre will program all the new keys as well as any keys you already have.
You may be asked to provide proof that you are the legitimate owner of the motorcycle.
The codes for any keys not present during the memory programming procedure are cancelled, to ensure that any keys that may have been lost can no longer be used to start the engine.

Notes

If you sell your motorcycle, it is essential to transfer all keys and the CODE CARD to the new owner.

E

Ignition switch and steering lock (fig. 32)

This is located in front of the fuel tank and has four positions:

A) ∩ : enables lights and engine operation;
B) ⊠ : disables lights and engine operation;
C) 🔒 : the steering is locked;
D) ⋐ : sidelight and steering lock.

Notes

To move the key to the latter two positions, push it in before turning. The key can be removed in positions (B), (C) and (D).

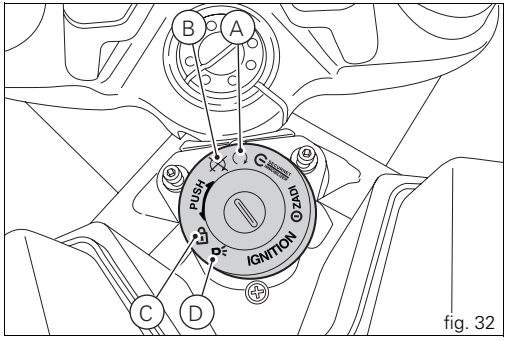

fig. 32

Left-hand handlebar switch (fig. 33)

1) Dip switch, two-position light selector switch:
position = low beam headlight on;
position = high beam headlight on.

2) Switch = three-position turn signal:
centre position = off;
position = left turn;
position = right turn.
To cancel the indicator, press the lever once it has returned to the central position.

3) Button = horn.

4) Button = high beam flasher.

5) Two-position instrument panel control switch:
position "▲";
position "▼".

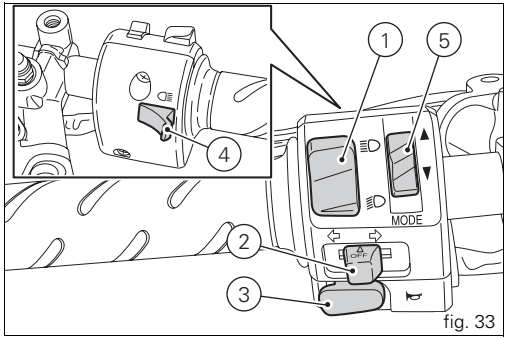

fig. 33

Clutch lever (fig. 34)

The lever (1) disengages the clutch. The span adjuster (2) serves to alter the distance of the lever from the handlebar. Lever distance is adjusted by 10 clicks of the knob (2). Turn the knob clockwise to move the lever away from twistgrip, or anti-clockwise to move it closer.
When the clutch lever (1) is operated, drive from the engine to the gearbox and the rear wheel is disengaged. Correct use of the clutch lever is very important in all riding situations, especially when moving off.

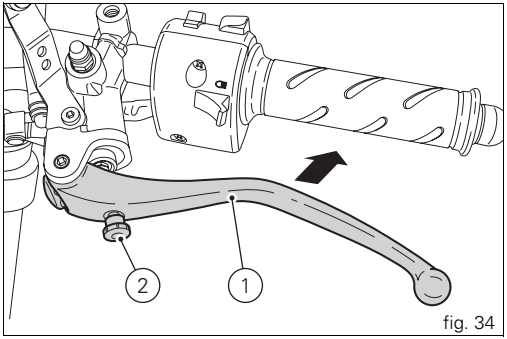

fig. 34

Warning

Any adjustment of clutch lever must be carried out when motorcycle is stationary.

Important

Using the clutch properly will prolong the life of the engine and prevent any damage to components in the transmission.

Notes

The engine can be started with the sidestand down and the gearbox in neutral. If starting with a gear engaged, pull in the clutch lever (in this case the sidestand must be up).

Right-hand handlebar switch (fig. 35)

1) Two-position ENGINE STOP switch:
position ○ (RUN) = run;
position ⊗ (OFF) = stop engine.

Warning

This switch is mainly intended for use in emergencies when you need to stop the engine quickly. After stopping the engine, return the switch to the ○ position to start the engine.

Important

Riding with the headlight on and then shutting off the engine at the switch (1) while leaving the ignition key in the ON position can cause the battery to discharg, as the headlight stays on.

2) Button ⏲ = engine start.

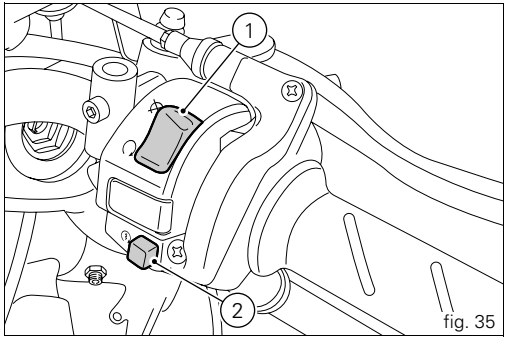

fig. 35

Throttle twistgrip (fig. 36)

The twistgrip (1) on the right handlebar opens the butterfly valves in the throttle body. When released, the twistgrip returns automatically to the initial position (idling speed).

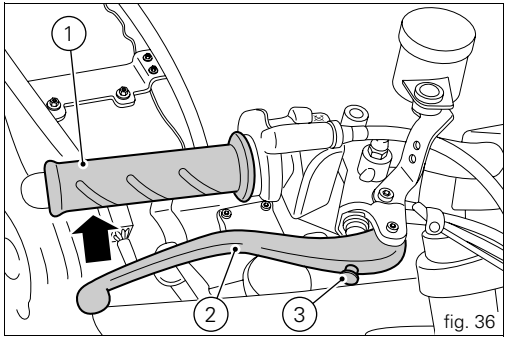

fig. 36

Front brake lever (fig. 36)

Pull the lever (2) towards the twistgrip to operate the front brake. The system is hydraulically assisted and you only need to pull the lever gently.
The brake lever has a knob (3) for adjusting the distance between lever and twistgrip on the handlebar. Lever distance is adjusted by 10 clicks of the knob (3). Turn the knob clockwise to move the lever away from twistgrip, or anti-clockwise to move it closer.

Warning

Before using these controls, read the instructions on page 62.

Rear brake pedal (fig. 37)

Push down on the pedal (1) with your foot to operate the rear brake.
The system is controlled hydraulically.

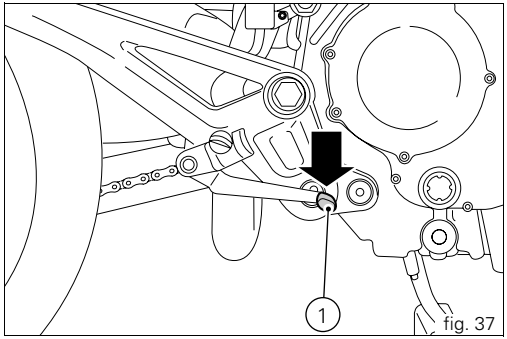

fig. 37

Gearchange pedal (fig. 38)

The gearchange pedal has a central position N, with automatic return, and two directions of movement:

- downwards = push down on the pedal to engage 1st gear and to shift down. At this point the N warning light on the instrument panel will go out;
- upwards = lift the pedal to engage 2nd gear and then 3rd, 4th, 5th and 6th gears.

Each time you move the pedal you engage the next gear up, one gear at a time.

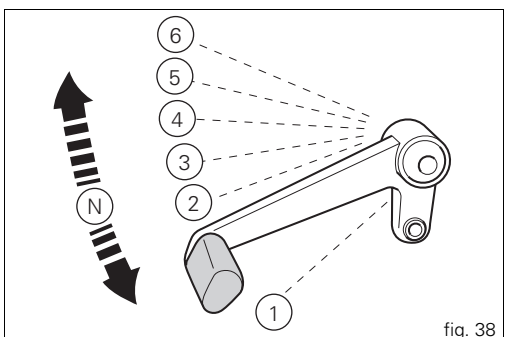

fig. 38

E

Adjusting the position of the gearchange and rear brake pedals

The position of the gearchange and rear brake pedals in relation to the footrests can be adjusted to suit the requirements of the rider.
To adjust the position, proceed as follows.
Restrain the tie-rod (1) and slacken the locknuts (2) and (3).

Notes

The locknut (2) has a left-hand thread.

Turn the tie-rod (1) using an open-ended wrench on the flats to move the gearchange pedal to the required position.
Tighten both locknuts onto the rod.
To adjust the position of the rear brake pedal, proceed as follows.
Slacken off the locknut (4).
Turn the pedal travel adjustment bolt (5) until the pedal is in the desired position.
Tighten the locknut (4).
Operate the pedal by hand to check that there is 1.5 to 2 mm of freeplay before the brake bites.
If not, adjust the length of the master cylinder pushrod as follows.
Slacken off the locknut (6) on the pushrod.
Screw the rod into the clevis (7) to increase play, or unscrew it to reduce play.
Tighten the locknut (6) and recheck the pedal freeplay.

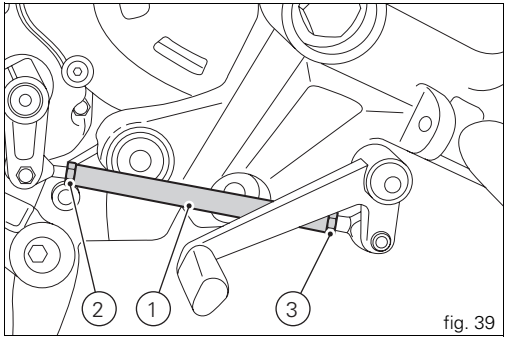

fig. 39

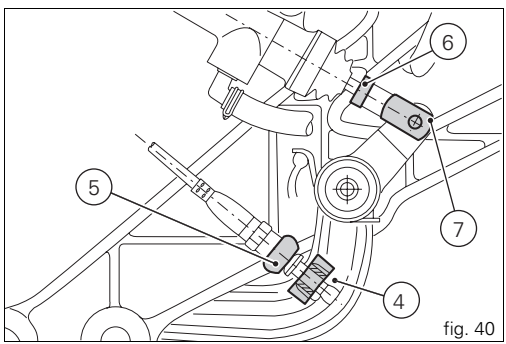

fig. 40

Main components and devices

Position on motorcycle (fig. 41)

1) Fuel tank filler cap.
2) Seat lock.
3) Helmet cable pin.
4) Sidestand.
5) Rearview mirrors.
6) Rear shock absorber adjusters.
7) Catalytic converter.

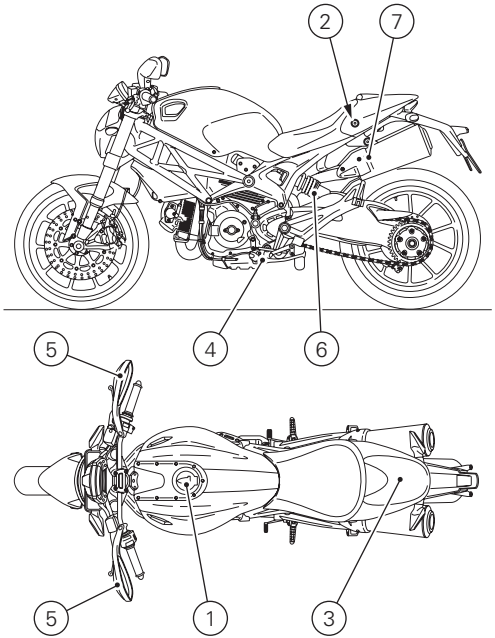

fig. 41

E

Fuel tank filler cap (fig. 42)

Opening

Raise the cover (1) and insert the key into the lock.
Give the key a 1/4 turn clockwise to unlock.
Lift the cap.

Closing

Close the cap with the key inserted and push it into its seat.
Turn the key anticlockwise to the initial position and remove it. Replace the lock cover (1).

Notes

The cap can only be closed with the key inserted.

Warning

Always make sure you have properly closed the fuel filler cap after refuelling (see page 64).

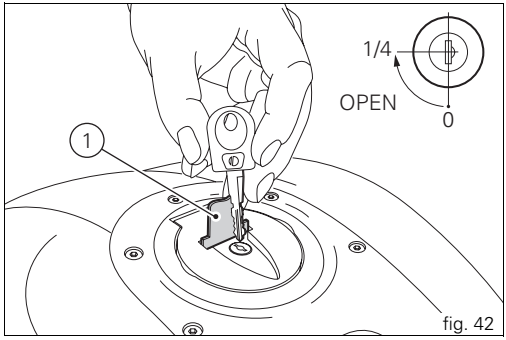

fig. 42

Seat lock and helmet holder

Opening

Insert the key in the lock and simultaneously apply downward pressure in the area of the catch to release the pin. Pull the seat backwards to release it from the front catches.
The helmet cable (1) is located at the rear of the compartment under the seat (see fig. 44). Pass the cable through the helmet and insert the end of the cable in the pin (2). Leave the helmet hanging and refit the seat to hold it in place.

Warning

This device protects the helmet against theft when the motorcycle is parked. Do not leave the helmet attached in this way when riding the motorcycle, as it can interfere with your movements and cause loss of control of the motorcycle.

Closing

Make sure all parts are correctly arranged and secured in the underseat compartment. Insert the front ends of the seat base under the U bolt in the frame, then push the rear end of the seat until you hear the bolt in the lock click into place. Check that the seat is firmly secured to the frame and remove the key from the lock.

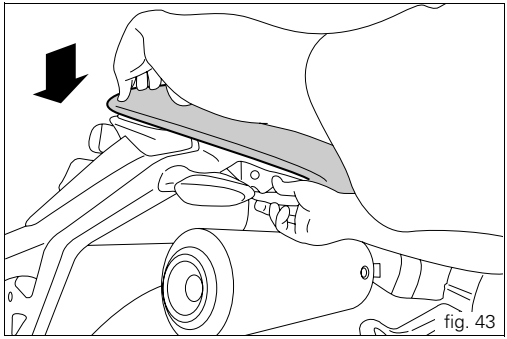
fig. 43

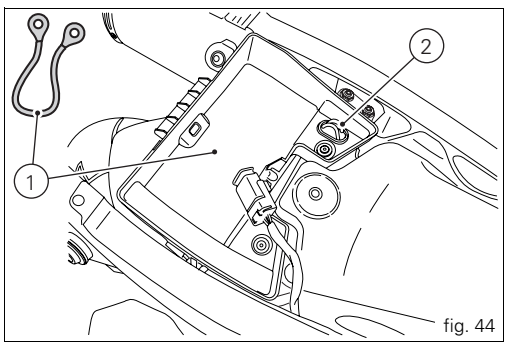

fig. 44

Sidestand (fig. 45)

Important
Before lowering the sidestand, check that the ground is sufficiently even and firm.

Do not park on soft ground, gravel or on asphalt softened by the sun etc. or the motorcycle may fall over.
When parking on a slope, always park with the rear wheel on the downhill side.
To lower the sidestand, hold the motorcycle handlebars with both hands and push down on the stand (1) with your foot until it is fully extended. Tilt the motorcycle until the sidestand is resting on the ground.

Warning
Do not sit on the motorcycle when it is supported on the sidestand.

To raise the sidestand to rest position (horizontal position), tilt the motorcycle to the right and, at the same time, lift the stand (1) with your foot.

Notes
It is advisable to check periodically that the stand mechanism (consisting of two springs, one inside the other) and safety sensor (2) are working properly.

Notes
The engine can be started with the sidestand down and the gearbox in neutral. If starting with a gear engaged, pull in the clutch lever (in this case the sidestand must be up).

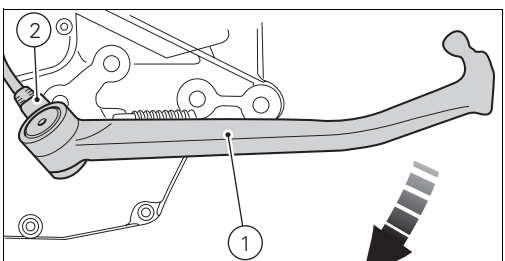

fig. 45

Front fork adjusters

The front fork can be adjusted for rebound, compression and spring preload.

The settings are adjusted by way of external adjuster screws:

1) to adjust rebound damping (fig. 46 and fig. 47);
2) to adjust inner spring preload (fig. 46 and fig. 47);
3) to adjust compression damping (fig. 48 and fig. 49).

Park the motorcycle in a stable position on its sidestand.
To adjust the rebound damping setting, turn the adjuster (1) on the top of each fork leg with a flat-blade screwdriver (1100) or the special wrench (1100S).
To adjust compression damping, turn the adjuster (3, fig. 48 and fig. 49) at the rear of the fork bottoms using a flat blade screwdriver.
As you turn the adjuster (1 and 3), you will hear it click.
Each click corresponds to a setting.
The maximum damping is obtained with the adjuster screwed in fully to the "0" position.

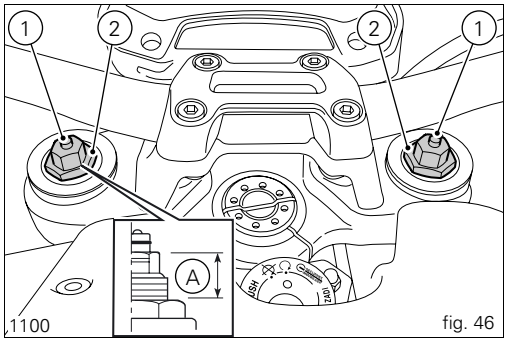

fig. 46

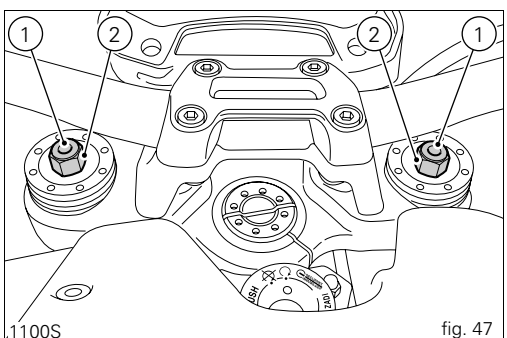

fig. 47

Start with this position and turn the adjuster counterclockwise. Count the clicks, which correspond to position 1, 2 and so forth.

The STANDARD factory settings are as follows:

1100
compression: 1.5 turns ±1/4 turn;
rebound: 1.5 turns ±1/4 turn.
Spring preload (A, fig. 47): 10 mm (3 turns from fully open position).
To adjust the preload of the spring inside each fork leg, turn the hexagonal adjuster nut (2, fig. 46) with a 22 mm hex wrench.

1100S
compression: 8 clicks;
rebound: 12 clicks.
Spring preload: 10 mm (3 turns from fully open position).
To change the spring preload for each fork leg, turn the adjuster (2, fig. 47) with a 22 mm hex wrench.

Important
Adjust both fork legs to the same setting.

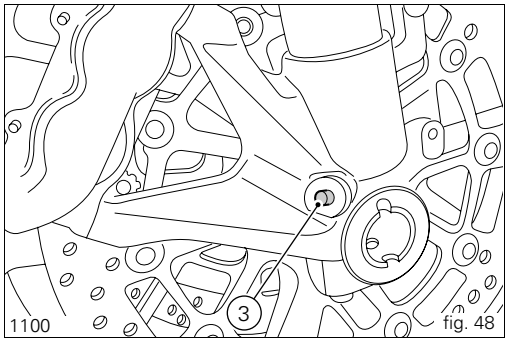

1100 fig. 48

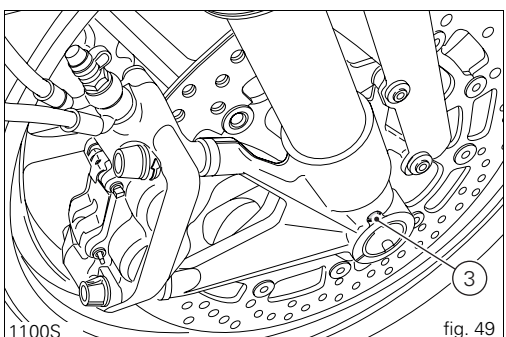

1100S fig. 49

Shock absorber adjusters (fig. 50 and fig. 51)

The shock absorber has external adjusters that enable you to adjust the suspension to suit the load on the motorcycle.
Adjuster (1), located on the left-hand side at the point at which the top of the shock absorber is fixed to the rear sub-frame, controls rebound damping.
Turn the adjuster (1) clockwise to increase damping, or counter-clockwise to reduce damping.

1100
STANDARD setting from the fully closed position (clockwise):
- unscrew the adjuster (1) by 13 clicks.

Spring preload: 18 mm.

1100S
STANDARD setting from the fully closed position (clockwise):
- unscrew the adjuster (1) by 15 clicks.

Spring preload: 19 mm.

The two nuts (2) on the upper part of the shock absorber serve to adjust the preload on the external spring. To change spring preload, slacken off the upper lock nut. Then TIGHTEN or LOOSEN the lower nut to INCREASE or DECREASE spring preload as required.

Warning

The shock absorber is filled with gas under pressure and may cause severe damage if taken apart by unskilled persons.

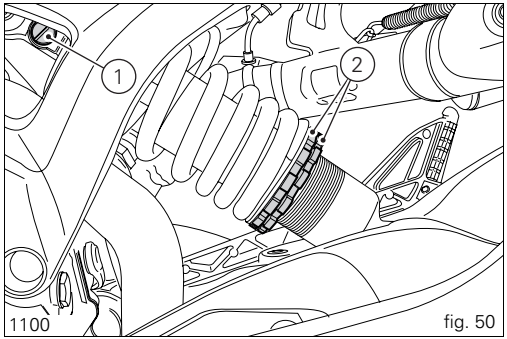

1100 fig. 50

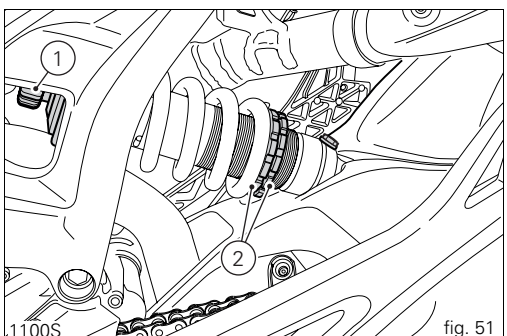

1100S fig. 51

Riding the motorcycle

Running-in precautions

Max. rpm (fig. 52)

Rpm limits to be observed during the running-in period and in normal use:

1) up to 1000 km;
2) from 1000 to 2500 km.

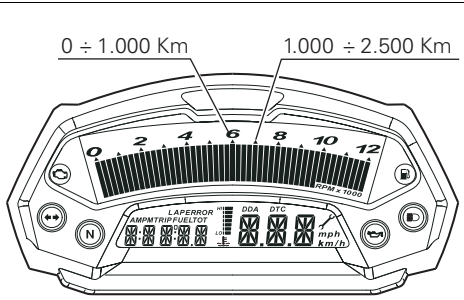

fig. 52

Up to 1000 km

During the first 1000 km keep an eye on the rev counter. The indicator must not exceed 5500-6000 rpm.
During the first hours of riding, it is advisable to run the engine at varying load and rpm, while keeping within the recommended limit.
For this reason, roads with numerous bends and hilly areas are ideal for running in the engine, brakes and suspension.
For the first 100 km, use the brakes gently. Do not brake violently or keep brake applied for too long. This will enable a correct break-in of friction material on brake pads against brake discs.
To allow all the mechanical moving parts in the motorcycle to adapt to one another, and to avoid shortening the life of the main engine components, it is advisable to avoid sudden acceleration and running the engine at high rpm for too long, especially uphill.
It is also advisable to check the drive chain frequently and ensure that it is lubricated as required.

From 1000 to 2500 km

At this point, you can ask for more power from the engine, being careful, however, never to exceed 7,000 rpm.

Important
Throughout the running-in period, be careful to stick to the recommended maintenance schedule and periodic service intervals indicated in the warranty booklet. Failure to follow these instructions will release Ducati Motor Holding S.p.A. from any liability for any engine damage or shortened engine life.

Keeping to the running-in recommendations will ensure longer engine life and reduce the need for overhauls and re-tuning.

Pre-ride checks

Warning
Failure to carry out these checks before starting may result in damage to the motorcycle and injury to rider.

Before starting, check the following points:

FUEL LEVEL IN THE TANK
Check the fuel level in the tank. Re-fuel if necessary (page 64).

ENGINE OIL LEVEL
Check the oil level in the sump through the sight glass. Top up if necessary (page 96).

BRAKE AND CLUTCH FLUID
Check the fluid levels in the respective reservoirs.

TYRE CONDITION
Check the pressure and condition of the tyres (page 94).

CONTROLS
Operate the brake, clutch, gearchange and throttle controls (lever, pedal and twistgrip) and check that they function correctly.

LIGHTS AND INDICATORS
Make sure the lights, indicators and horn work properly. Replace any burnt-out bulbs (page 91).

KEY LOCKS
Check that the fuel filler cap and the seat are locked.

SIDESTAND
Make sure the sidestand operates smoothly and is in the correct position (page 54).

Warning
If there are any faults or malfunctions, do not start the motorcycle and contact your Ducati Dealer or Authorized Service Centre.

E

Starting the engine

Notes
Follow the "High ambient temperature" procedure to start the engine when it is already warm.

Warning
Before starting the engine, familiarise yourself with the controls that you will use when riding.

Normal ambient temperature
(between 10 °C/50 °F and 35 °C/95 °F):

1) Turn the ignition switch to position (1, fig. 53).
   Check that both the green light N and the red light on the instrument panel come on.

Important
The oil pressure warning light should go out a few seconds after the engine has started (page 11).

Warning
The sidestand should be in rest position (horizontal), otherwise the safety sensor prevents the engine starting.

Notes
The engine can be started with the sidestand down and the gearbox in neutral. If starting with a gear engaged, pull in the clutch lever (in this case the sidestand must be up).

2) Make sure that the stop switch (2, fig. 54) is in the RUN position, then press the starter button (3, fig. 54).

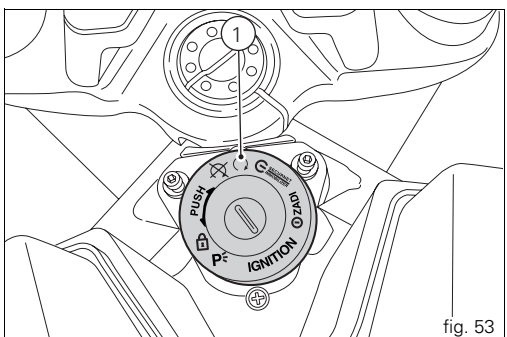

fig. 53

Allow the engine to start on its own, without turning the throttle.

Notes

If the battery is flat, the system automatically disables operation of the starter motor.

Important

Do not rev the engine when cold. Allow some time for the oil to warm up and reach all points that need lubricating.

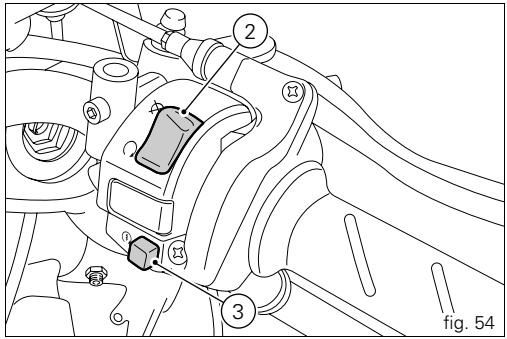

fig. 54

Moving off

1) Disengage the clutch by squeezing the control lever.
2) Push down the gearchange lever firmly with the tip of your foot to engage first gear.
3) Raise the engine revs by turning the throttle twistgrip while gradually releasing the clutch lever. The motorcycle will start moving.
4) Release the clutch lever completely and accelerate.
5) To change up a gear, close the throttle to reduce the engine revs, disengage the clutch, lift the gearchange lever and release the clutch lever.

To change down, proceed as follows: release the twistgrip, pull the clutch lever, shortly speed up to help gears synchronize, shift down and release the clutch.
Use the controls intelligently and opportunely: when riding uphill, change down immediately when the motorcycle begins to slow down to avoid abnormal strain on the motorcycle frame and the engine.

Important

Avoid sudden acceleration, as this may lead to misfiring and transmission snatching. The clutch lever should not be held in longer than necessary after a gear is engaged, otherwise friction parts may overheat and wear out.

Braking

Slow down in time, change down to use the engine brake, then apply both brakes. Pull in the clutch lever before the motorcycle comes to a stop to prevent the engine stalling.

Warning

Use both the brake lever and the brake pedal for effective braking. Using only one of the brakes will give you less braking power. Never use the brake controls harshly or suddenly as you may lock the wheels and lose control of the motorcycle. When riding in the rain or on slippery surfaces, braking capacity is significantly reduced. Always use the brakes very gently and carefully when riding under these conditions. Any sudden manoeuvres may lead to loss of control.

When riding down long, steep downhill slopes, change down to use engine braking. Apply the brakes intermittently for brief periods only. Keeping the brakes applied continuously causes the friction material to overheat and dangerously reduces braking effectiveness. Tyre inflation pressures below the specified value will reduce braking efficiency, and compromise steering precision and roadholding on bends.

Stopping the motorcycle

Reduce speed, change down and release the throttle twistgrip. Change down to engage first gear and then neutral. Apply the brakes and bring the motorcycle to a complete stop. To switch the engine off, simply turn the key to position (1, fig. 55).

Important

Do not leave the key in the ON position when the engine is off to avoid damaging the electrical components.

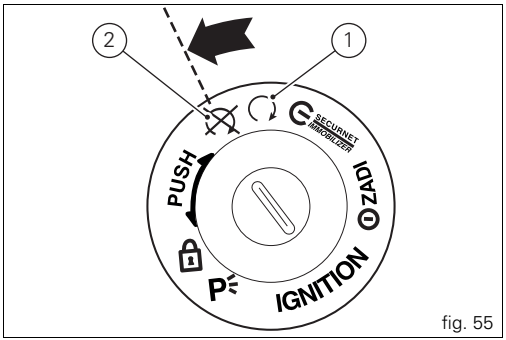

fig. 55

Refuelling

Do not overfill the tank when refuelling. The fuel level should always be below the rim of the filler cap recess (fig. 56).

Warning

Use fuel with low lead content and an original octane number of at least 95.
Check that no fuel is trapped in the filler cap recess.

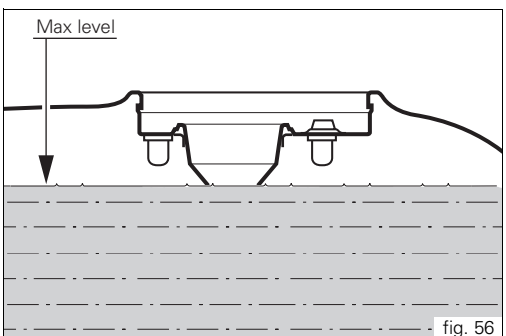

fig. 56

Parking

Stop and park the motorcycle on the sidestand (see page 54). To prevent theft, turn the handlebar fully left and turn the ignition key to the position (3, fig. 57).
If you park in a garage or other indoor area, make sure that there is proper ventilation and that the motorcycle is not near a source of heat.
If necessary, you can leave the sidelights on by turning the key to position (4, fig. 57).

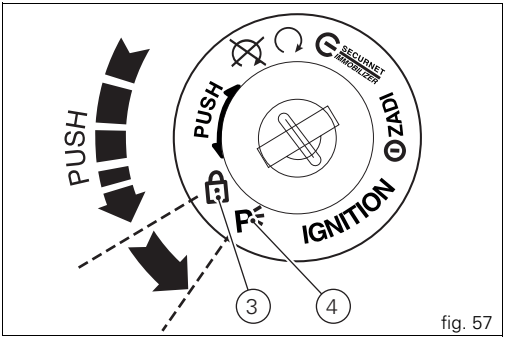

fig. 57

Important

Do not leave the key at (4, fig. 57) for long periods or the battery will run down. Never leave the motorcycle unattended with the ignition key inserted.

Warning

The exhaust system might be hot even after engine is switched off; take special care not to touch the exhaust system with any part of your body and do not park the motorcycle next to inflammable material (wood, leaves, etc.).

Warning

Using padlocks or other locks designed to prevent movement of the motorcycle (such as brake disc locks, rear sprocket locks, and so on) is very dangerous, and may impair motorcycle operation and the safety of rider and passenger.

Toolkit and accessories (fig. 58)

The underseat compartment contains:
- use and maintenance manual;
- helmet fastening cable;
- toolkit for routine maintenance operations and checks.

To access the underseat compartment, remove the seat (page 53).

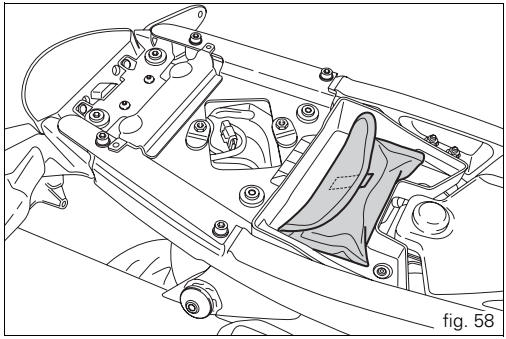
fig. 58

The toolkit

Contains:
- fuse pliers;
- 8/10 double-ended wrench;
- helmet fastening cable;
- screwdriver;
- screwdriver handle;
- 16 mm box wrench;
- 8 mm bar;
- 3 mm Allen key;
- 5 mm Allen key;
- 6 mm Allen key.

Main Maintenance Operations

Changing the air filter

Important
For air filter servicing, contact your Ducati dealer or authorised Service Centre.

Checking the brake and clutch fluid level

(fig. 59)
The levels should not fall below the MIN marks on the respective reservoirs.
If the level is too low, air can get into the circuit, thus impairing the efficiency of the system.
Brake and clutch fluid must be topped up and changed at the intervals specified in the routine maintenance table (see Warranty Booklet) by a Ducati Dealer or authorized Service Centre.

Important
It is recommended that all brake and clutch hoses be renewed every 4 years.

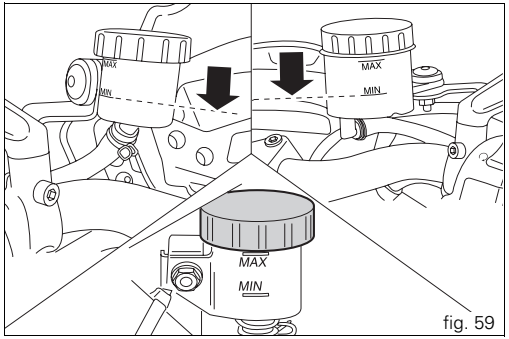

fig. 59

Clutch system

If there is too much play at the clutch lever and the motorcycle jumps or stops when a gear is engaged, this indicates air in the system. Contact a Ducati Dealer or authorized Service Centre to have the system inspected and the air bled from the system.

Warning
The clutch fluid level in the reservoir tends to rise as the friction material on the clutch plates wears out. Do not exceed the specified level (3 mm above the minimum level).

Brake system

If there is excessive play at the brake lever or pedal even though the brake pads are still in good condition, contact a Ducati Dealer or authorized Service Centre to have the system inspected and any air expelled from the circuit.

Warning

Brake and clutch fluid can damage paintwork and plastic parts, so avoid contact.
Hydraulic fluid is corrosive and can cause damage and injuries.
Never mix fluids of different qualities.
Check that the seals are in good condition.

Checking the brake pads for wear (fig. 60)

Front brake

The brake pads are marked with wear indicators so that they can be checked without removing them from the calipers. If the grooves in the pad friction material are still visible, the pad is still in good condition.

Rear brake

The thickness of the friction material on each pad must be at least 1 mm.

Important

Have the brake pads replaced by a Ducati Dealer or authorized Service Centre.

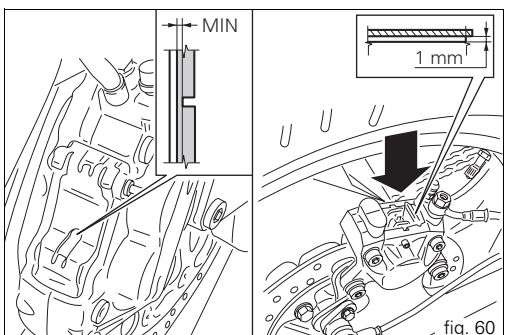

fig. 60

Lubricating cables and linkages

The condition of the outer cables of the throttle and starter cables should be checked at regular intervals. There should be no signs of pinching or cracking on the outer plastic sheath. Operate the control to check that the inner cable slides smoothly: if you feel any rubbing or catching, have the cable replaced by a Ducati Dealer or authorized Service Centre.
To prevent these problems, periodically lubricate the ends of each control cable with SHELL Advance Grease or Retinax LX2.

In the case of the throttle cable, open the twistgrip housing by unbolting the two bolts (1, fig. 61) and grease the end of the cable and the race.

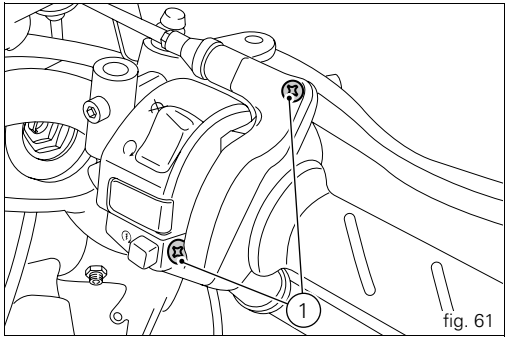

fig. 61

Warning

Close the twistgrip housing carefully, inserting the cable in the race.

Refit the housing and tighten the bolts (1) to 1.8 Nm.

To ensure smooth operation of the sidestand pivot, remove dirt and apply SHELL Alvania R3 grease to all friction points.

Adjusting the throttle cable

In all steering positions, the throttle twistgrip should have about 2 to 4 mm of free travel, measured at the outer edge of the twistgrip housing. Adjust if necessary, using the adjuster (1, fig. 62) located on the twistgrip.

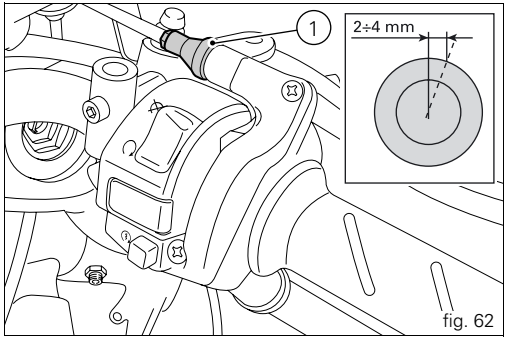

fig. 62

Charging and maintenance of the battery during winter storage

Your motorcycle is equipped with a connector to which you can connect a special battery charger available from our sales network.

Removal of the battery

Important
For removal of the battery ALWAYS contact your Ducati dealer or Authorized Service Centre.

Refit the seat (page 53).

Unscrew the bolts (1) and (2) securing the front tank cover (3) but do not remove the cover.
Unbolt the bolts (4) and (5) and recover the nylon washers (7).

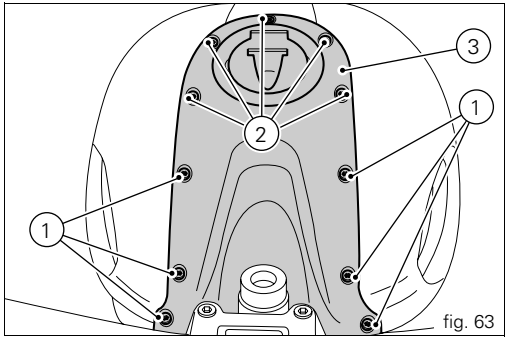

fig. 63

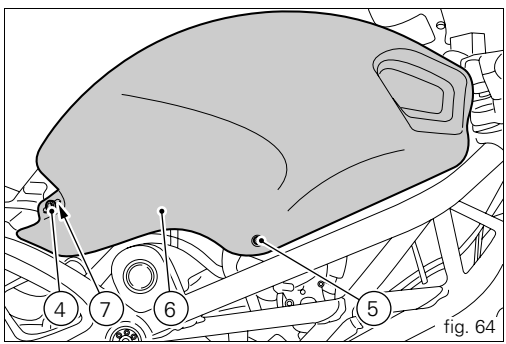

fig. 64

E

Remove the right-hand tank cover (6) releasing the tabs (A) from the corresponding slots (B) in the rear cover.
Repeat the above operations to remove the left-hand tank cover.
Remove the front tank cover (3) and recover the bushes (C) and spacers (D).

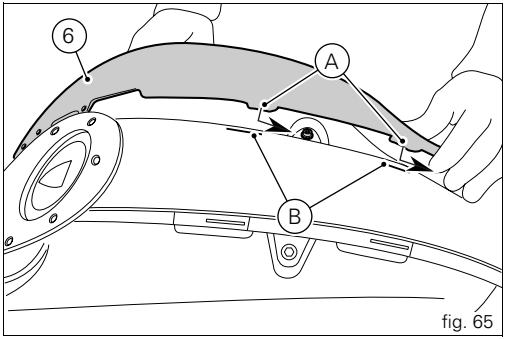

fig. 65

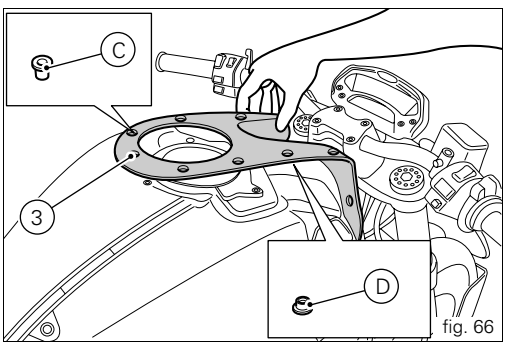

fig. 66

Unbolt the retaining bolt (E).
Release the oil hoses from the clips (F).
Unbolt the two retaining bolts (9) and release the cover (8).
Withdraw the breather hose (10) from the cover (8).
Withdraw the hose (10) upwards, leaving it attached to the tank breather and drain hose unions.

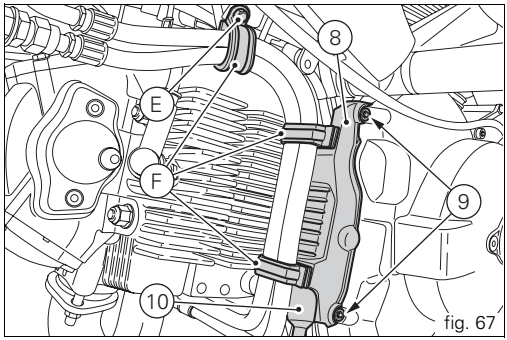

fig. 67

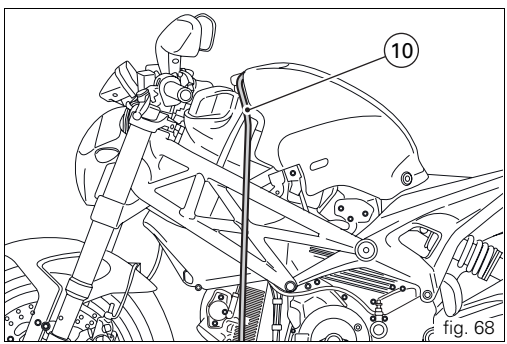

fig. 68

E

Working on the right-hand side of the motorcycle, disconnect the wiring connector (11) of the fuel level sensor from the main wiring harness, unbolt the bolt (12) securing the side of the tank to the frame and recover the washer (13).

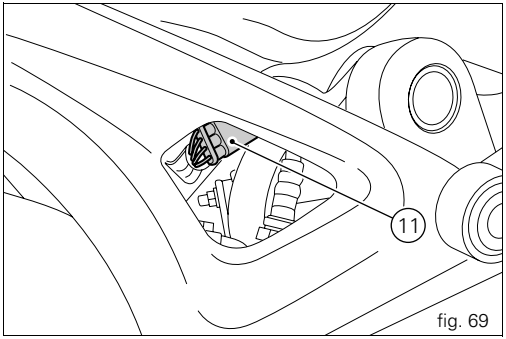

fig. 69

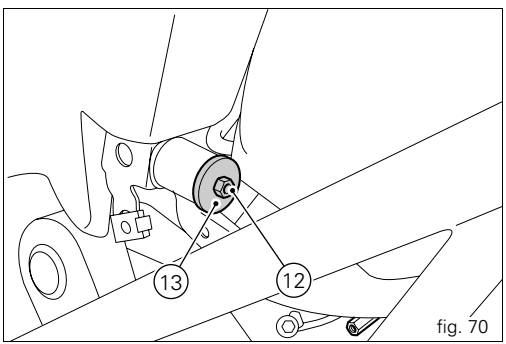

fig. 70

Unbolt the bolt (14) and recover the washer (15).
Release the fuel pipes (G) from the retaining clips (H).

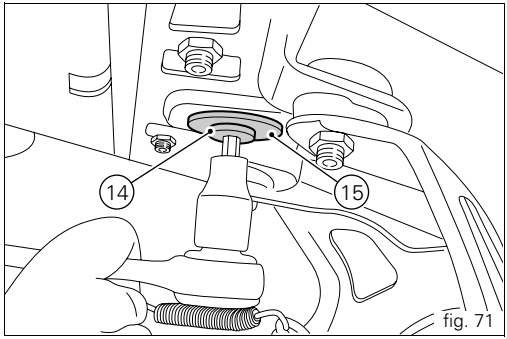

fig. 71

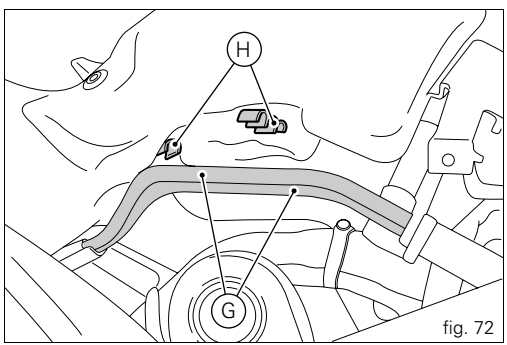

fig. 72

Release the the lambda sensor cable (L) from the clip (M) on the tank flange cover.

Warning
Before removing the flange cover (16), make sure the tank is empty and position a rag to collect any spilt fuel.

Hold the fuel tank in a raised position and remove the flange cover (16) by unbolting the nuts (17).

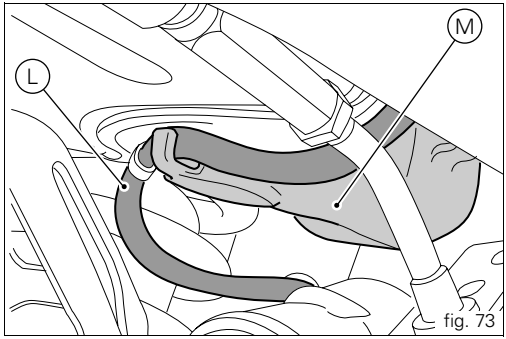

fig. 73

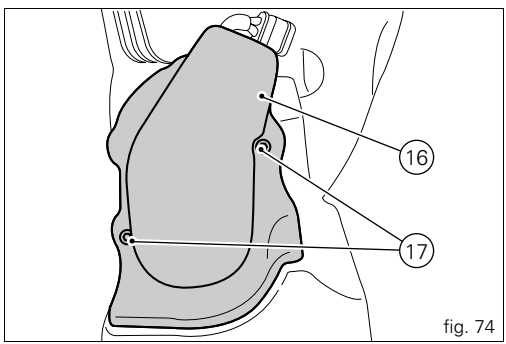

fig. 74

Disconnect the quick-release fittings (18) from the flange. Remove the elastic retaining strap (19), remove the caps from the terminals, unbolt the bolts (22) on terminal clamps (20) and (21), always starting with the negative terminal, then remove the battery from its seating.

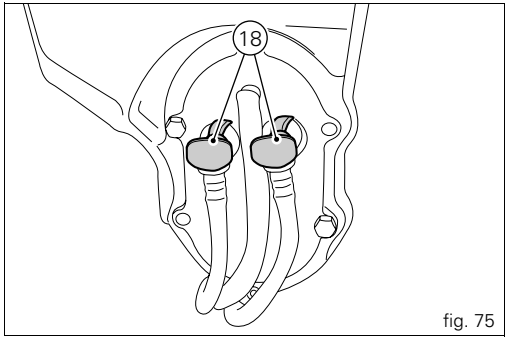

fig. 75

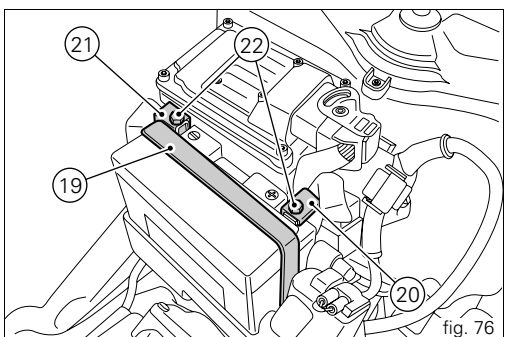

fig. 76

Refitting the battery

Important
To install the battery ALWAYS contact your Ducati dealer or Authorized Service Centre.

Install the battery in the battery support and secure it with the elastic retaining strap (19).

Warning
Connect the positive lead (20) to the positive terminal and the negative lead (21) to the negative terminal, as shown in the photo.

Insert the bolts (22) in the terminals (20) and (21), always starting with the positive terminal (red lead).

Warning
Position the leads (20) and (21) as shown in the photo.

Tighten the bolts (22) to a torque of 10 Nm ±10%.
Apply grease around the battery terminals to prevent corrosion.

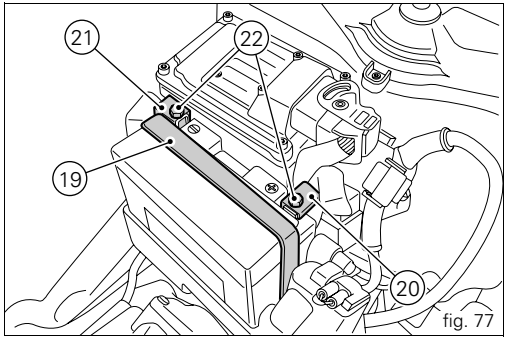

fig. 77

Warning

If the fuel tank was removed from the motorcycle, refit it by inserting the front pins (E) in corresponding locations in the frame.

Important

To refit the fuel tank ALWAYS contact your Ducati dealer or Authorized Service Centre.

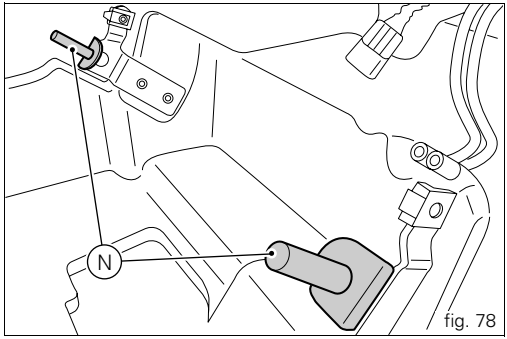

fig. 78

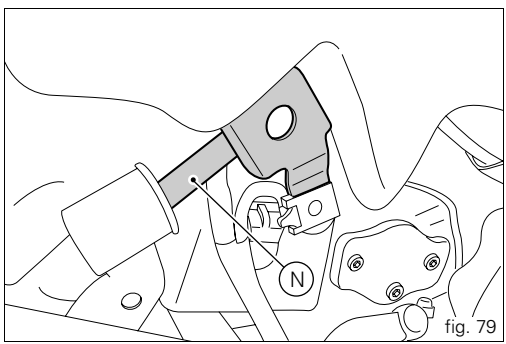

fig. 79

With the tank raised, reconnect the quick-release fittings (18) to the flange and refit the flange cover (16) tightening the nuts (17) to a torque of 3 Nm ±0.3%.

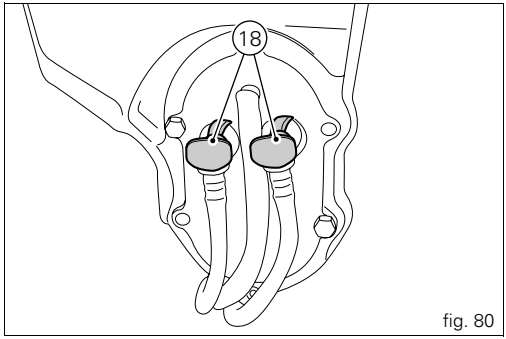

fig. 80

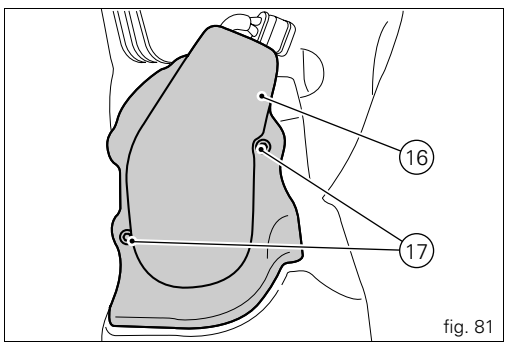

fig. 81

Connect the fuel sensor (11) to the main wiring harness. Locate the lambda sensor cable (L) in the clip (M) on the tank flange cover and secure it with a cable tie.

Important
When the tank is lowered, the fuel sensor wiring connector (11) should rest on the vertical cylinder head, as shown.

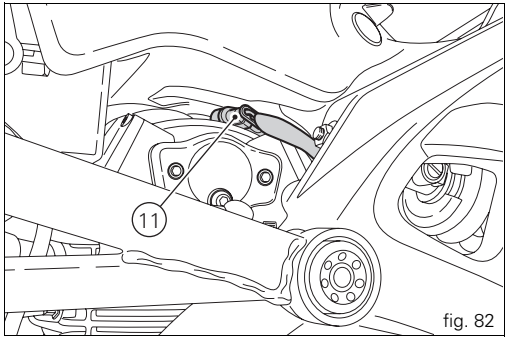

fig. 82

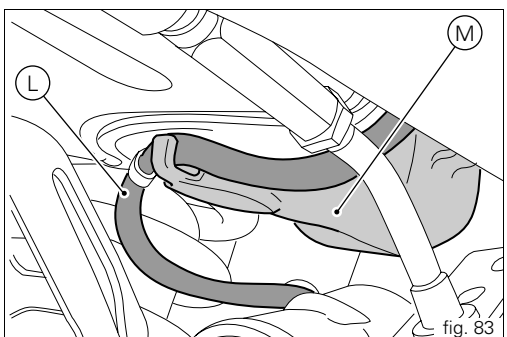

fig. 83

E

Attach the fuel pipes (G) to the retaining clips (H).
Secure the tank to the frame with the bolt (12) and the washer (13).
Tighten the bolt (12) to a torque of 10 Nm ±10%.

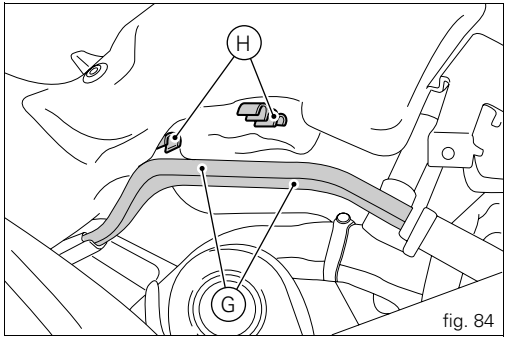

fig. 84

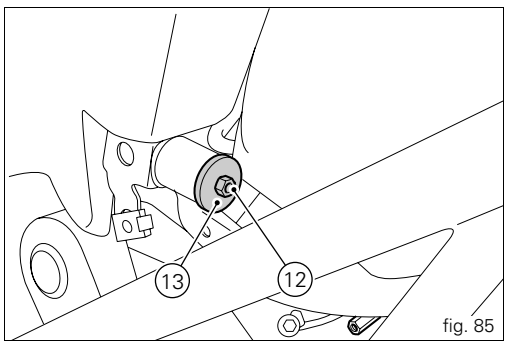

fig. 85

Fix the tank to the subframe with the bolt (14) and the washer (15).
Tighten the bolt (14) to a torque of 10 Nm ±10% while counterholding the threaded insert (M) on the top of the tank with a 5 mm hex socket wrench.

Important
Threaded insert (M) is not present on the USA version.

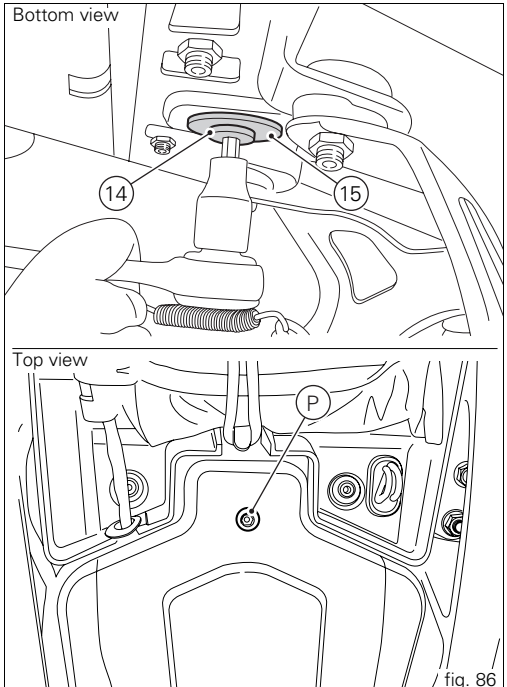

fig. 86

Locate the breather/drain hose (10) on the motorcycle and secure it in position by refitting the cover (8).
Fit the two bolts (9), remembering to fit the longest bolt in the lower hole, and tighten to a torque of 10 Nm.
Secure the oil hoses in the clips (F) and tighten the bolt (E) to a torque of 10 Nm ±10%.

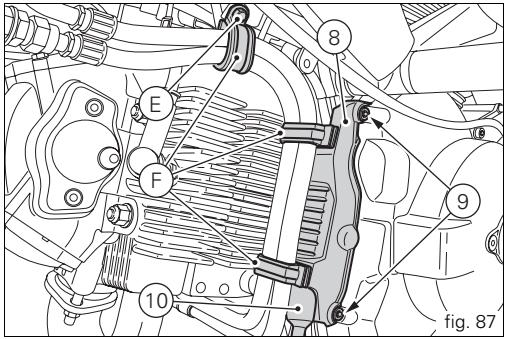

fig. 87

Check that the four bushes (C, fig. 88) are installed on the front tank cover (3) with larger diameter side facing upwards, and check that the spacers (D, fig. 89) are also installed.

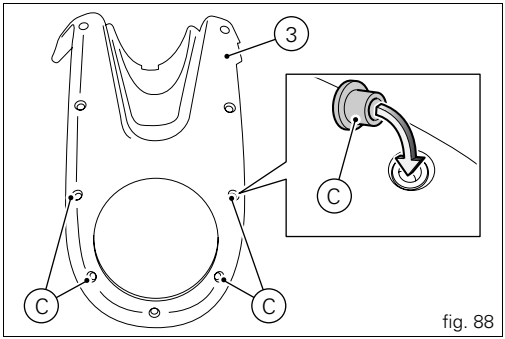

fig. 88

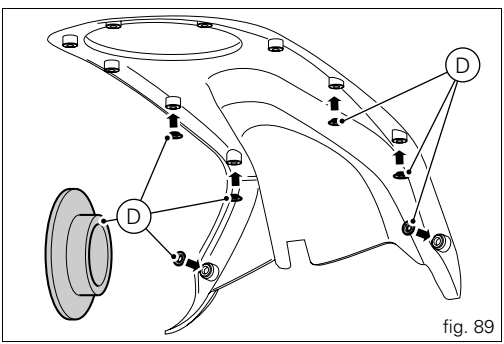

fig. 89

Locate the front tank cover (3) on the fuel tank.
Insert the spacer (23) in the hole provided on the inside of the RH tank cover (6).

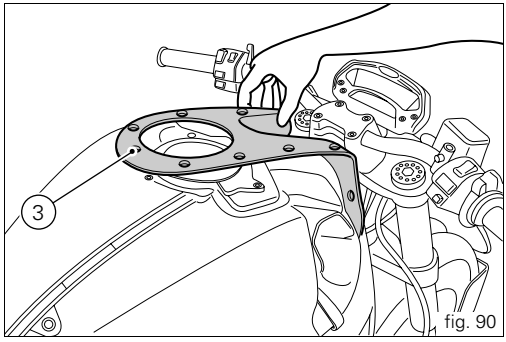

fig. 90

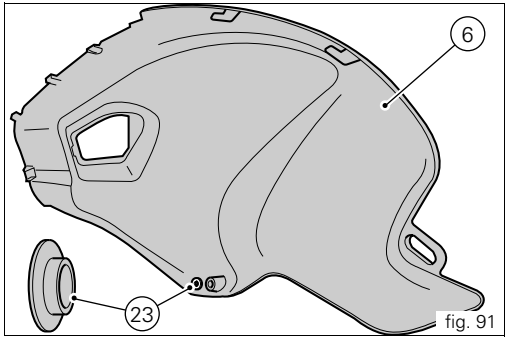

fig. 91

Refit the right-hand tank cover (6), inserting the tabs (A) in the corresponding slots (B) in the rear cover.

Notes

Insert the tabs (O) under the front tank cover (3).

Repeat the above operations to refit the left-hand tank cover. Fit the bolts (1) and (2) in the front tank cover (3), starting with those at the front.

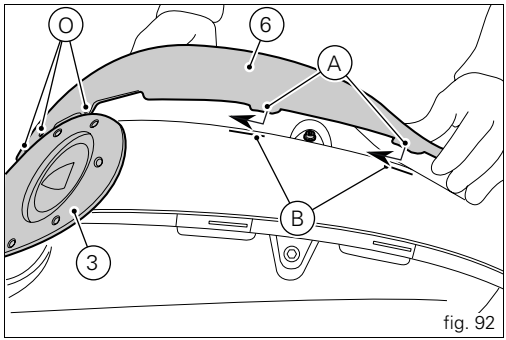

fig. 92

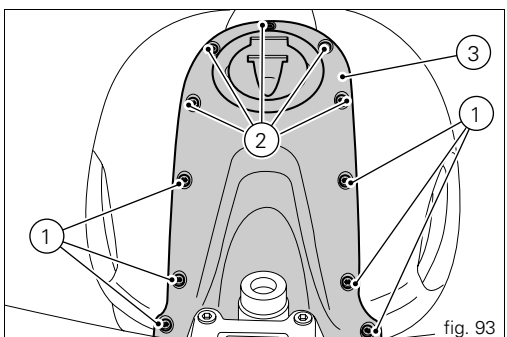

fig. 93

E

Insert the bolts (4) with the nylon washers (7) and (5) to secure the RH and LH tank covers (6). Tighten the bolts (1) and (2) to a torque of 2 Nm ±10%, starting with the bolts (2) arround the filler cap. Tighten the bolts (4) and (5) to a torque of 2 Nm ±10%.
Refit the seat (page 53).

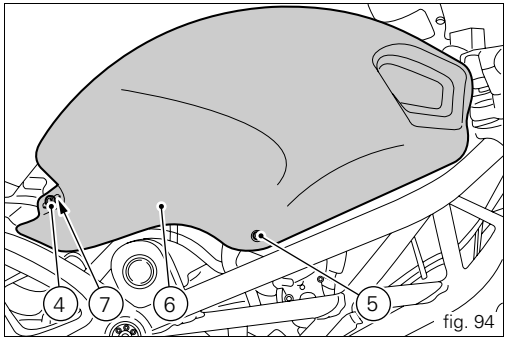

fig. 94

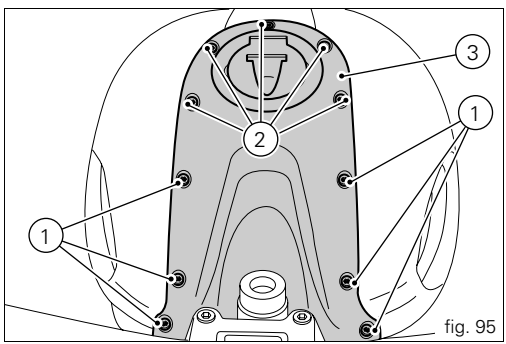

fig. 95

Tensioning the drive chain

Turn the rear wheel slowly to find the position at which the chain is at its most taut.
With the motorcycle on its sidestand, press with a finger in the centre of the bottom run of the chain and measure the distance between the centres of chain link pins and the aluminium swingarm. The distance should be 61 to 63 mm (fig. 96).

Important
Have the chain tensioned at a Ducati Dealer or authorized Service Centre.

Warning
Correct tightening of the swingarm bolts (1, fig. 97) is essential to rider and passenger safety.

Important
An incorrectly tensioned chain will lead to accelerated wear of the transmission components.

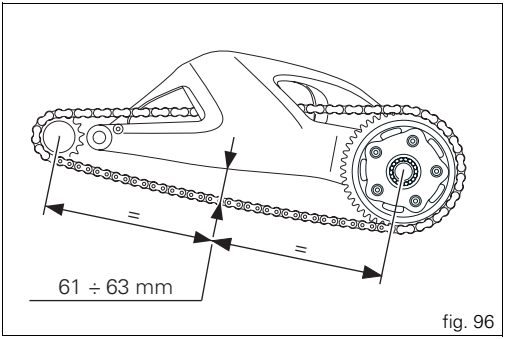

fig. 96

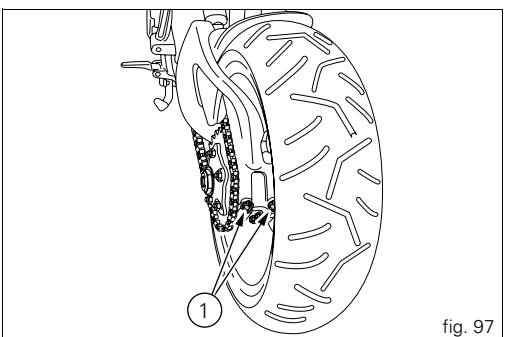

fig. 97

Lubricating the drive chain

The chain fitted on your motorcycle has O-rings to protect its moving parts from dirt, and to hold the lubricant inside. So as not to damage these seals when cleaning the chain, use special solvents and avoid aggressive washing with high-pressure steam cleaners. After cleaning, blow the chain dry with compressed air or wipe with an absorbent material, then lubricate each link with SHELL Advance Chain or Advance Teflon Chain.

Important

Using non-specific lubricants may cause severe damage to the chain and the front and rear sprocket.

Changing bulbs

Before replacing a burnt-out bulb, make sure that the new one matches the voltage and wattage specifications in the "Electrical System" paragraph on page 111.

Important

For bulb replacements, contact your Ducati dealer or authorised Service Centre.

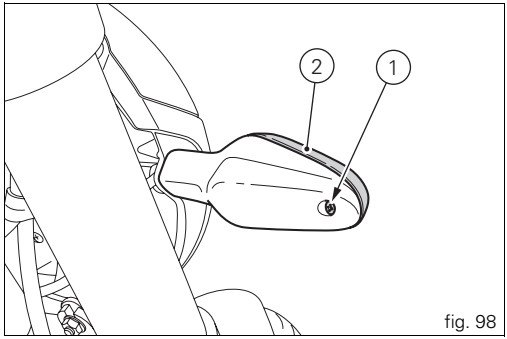

fig. 98

Turn signals (fig. 98)

Loosen the bolt (1) and detach the lens (2) from the turn signal support.
The bulb has a bayonet-type end fitting: to remove it, push it in and turn it counter-clockwise. Push in the new bulb and turn it clockwise until it clicks into place. Refit the lens by inserting the tab (A) in the corresponding slot in the turn signal support.
Refit and tighten the bolt (1).

Headlight aim (fig. 99)

To check the headlight aim, place the motorcycle upright with the tyres inflated to the correct pressure and one person sitting astride the motorcycle. The motorcycle should be perfectly vertical, with its longitudinal axis at right angles to a wall or screen at a distance of 10 metres. Draw a horizontal line on the wall at the height of the centre of the headlight and a vertical one in line with the longitudinal axis of the motorcycle.
If possible, perform this check in conditions of low ambient light.
Switch on the low beam headlight:
the upper edge between the dark area and the lit area should not be above 9/10th of the height of the headlamp centre from the ground.

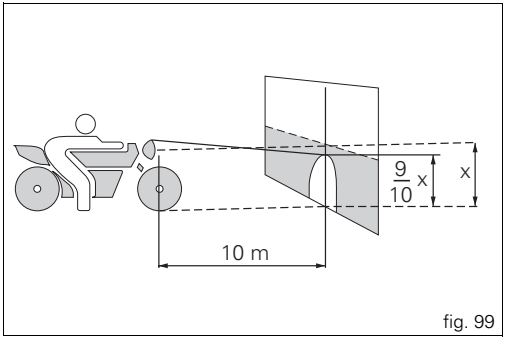

fig. 99

Notes

This is the procedure specified by Italian regulations for checking the maximum height of the light beam.
Owners in other countries should adapt this procedure to the regulations in force in the country where the motorcycle is used.

To adjust the headlight beam vertically, turn the adjuster screws (1, fig. 100); for horizontal adjustment, turn the adjuster screw (2).

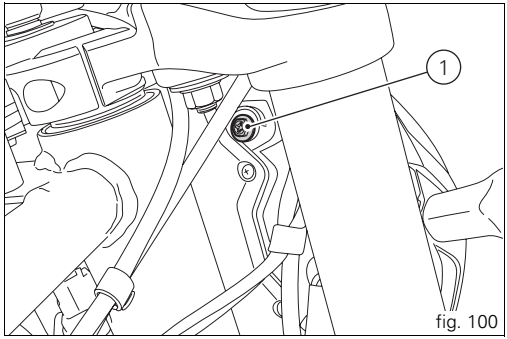

fig. 100

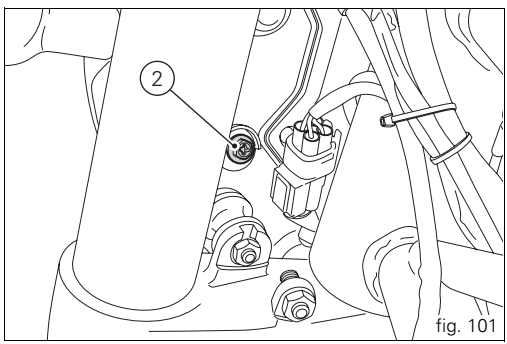

fig. 101

Tyres

Front tyre pressure:
2.2 bar.
Rear tyre pressure:
2.4 bar.

As tyre pressures are affected by changes in temperature and altitude, check and adjust them whenever you are riding in areas where there are large variations in temperature or altitude.

Important

Check and adjust the pressures with the tyres cold.

To prevent distortion of the front wheel rim, increase tyre pressure by 0.2 to 0.3 bar when riding on bumpy roads.

Repairing or renewing tyres

With minor punctures, tubeless tyres take a long time to deflate, as they tend to hold the air inside. If you find that one of the tyres is slightly deflated, check the tyre for slow punctures.

Warning

Punctured tyres must be renewed.
Replace with tyres of the original brand and type.
Be sure to tighten the valve dust caps securely to prevent leaks while riding. Never fit tyres with inner tubes, as these can cause the tyre to burst suddenly, with possibly serious consequences for the rider and passenger.

After changing the tyre, the wheel must be balanced.

Important

Do not remove or alter the position of the wheel balancing weights.

Notes

If tyres need changing, contact a Ducati Dealer or authorized Service Centre to make sure wheels are removed and refitted correctly.

Minimum tread depth

Measure the tread depth (S, fig. 102) at the point where the tread is most worn.
It should not be less than 2 mm, and in any case not less than the legal limit.

Important

Visually inspect the tyres at regular intervals for cracks and cuts, especially on the side walls, and bulges or large stains that indicate internal damage. Replace them if badly damaged.
Remove any stones or other foreign bodies stuck in the tread.

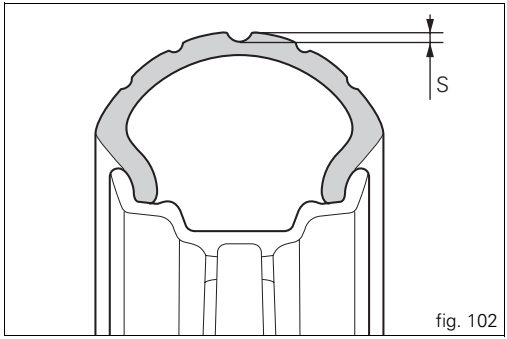

fig. 102

Checking the engine oil level (fig. 103)

Check the engine oil level through the sight glass (1) on the clutch-side crankcase cover.
Check the oil level with the motorcycle upright and the engine cold. Allow a few minutes for the oil level to stabilize after stopping the engine.
The oil level should be between the two marks next to the sight glass. If the level is below the bottom mark, top up with SHELL Advance Ultra 4 engine oil.
Remove the oil filler cap (2) and top up until the oil reaches the required level. Replace the filler cap.

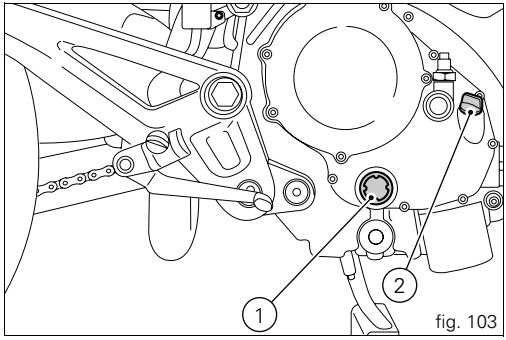

fig. 103

Important

To change the engine oil and filters at the intervals specified in the maintenance table in the Warranty Booklet, contact a Ducati dealer or Authorized Service Centre.

Oil viscosity

SAE 15W-50
The other viscosity values shown in the table can be used if the local average temperature is within the limits specified for that oil viscosity.

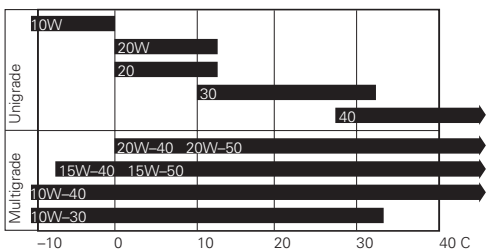

Cleaning and renewing the spark plugs

(fig. 104)

Spark plugs are an important part of the engine and should be checked at regular intervals.
This is a relatively simple operation and provides a good indication of how well the engine is running.
Pull the spark plug caps off the spark plugs and remove the plugs from the cylinder heads using the wrench supplied in the toolkit.
Check the colour of the ceramic insulation around the central electrode: an even brown colour is a sign that the engine is in good running order.
If the insulation is any other colour, or if there are dark deposits, renew the spark plug and describe the condition of the old plug to a Ducati dealer or Authorized Service Centre.
Also check the central electrode; if it is worn or glazed, renew the spark plug.
Check the electrode gap, which must be 0.7 to 0.8 mm.

Important

If adjustment is required, bend the side electrode carefully. A gap outside the specified limits will adversely affect engine performance and may lead to difficult starting or erratic idling.

Thoroughly clean the electrode and insulation using a wire brush, and check the condition of the washer.
Clean around the spark plug seating in the cylinder head, taking care not to drop any foreign material into the combustion chamber.

Insert the spark plug in the cylinder head and screw in fully by hand. Tighten to a torque of 20 Nm.
If you do not have a torque wrench, after hand-tightening the spark plug, turn it a further half turn with the wrench provided in the tool kit.

Important

Do not use spark plugs with an unsuitable heat rating or incorrect reach.
The spark plug must be tightened correctly.

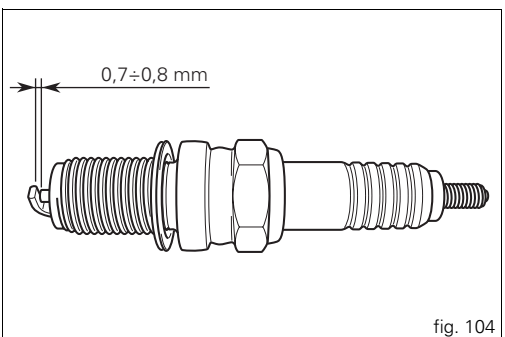

fig. 104

General cleaning

To preserve the original shine on metal surfaces and paintwork, wash and clean your motorcycle at regular intervals depending on the type of use and according to the particular road conditions. Use specific products, where possible biodegradable. Avoid aggressive detergents or solvents.

Important

Do not wash your motorcycle immediately after use, as marks can form due to evaporation of the water on hot surfaces.
Never clean the motorcycle using hot or high-pressure water jets.
Cleaning the motorcycle with a high-pressure water jet may lead to seizure or serious faults in the front fork, wheel hub assembly, electrical system, front fork seals, air inlets or exhaust silencers, with consequent loss of safety.

If parts of the engine are unusually dirty or greasy, use a degreasing agent, avoiding contact with transmission components (chain, front and rear sprockets, etc.).
Rinse with warm water and dry all surfaces with chamois leather.

Warning

There may be loss of braking efficiency immediately after washing the motorcycle. Never grease or lubricate the brake discs. This will impair braking efficiency.
Clean the discs with an oil-free solvent.

Storing the motorcycle

If the motorcycle is to be left unused for a long period, it is advisable to carry out the following operations first:

- clean the motorcycle;
- empty the fuel tank by removing the drain plug and gasket;
- pour a few drops of engine oil into the cylinders through the spark plug bores, then turn the engine over by hand a few times to form a protective film of oil on the inner walls of the cylinder;
- place the motorcycle on the paddock stand;
- disconnect and remove the battery. If the motorcycle has been left unused for more than a month, the battery should be checked and re-charged if necessary.

Protect the motorcycle with a specific motorcycle cover that will not damage the paintwork or retain moisture. This type of motorcycle cover is available from Ducati Performance.

Important notes

The legislation in some countries (France, Germany, Great Britain, Switzerland, etc.) sets certain noise and pollution standards.

Periodically carry out the required checks and renew parts as necessary, using Ducati original spare parts, in compliance with the regulations in the country concerned.

Maintenance

Programmed maintenance plan: operations to be carried out by the dealer

List of operations with frequency (distance or time interval*)	km x1000	1	12	24	36	48	60
	miles x1000	0.6	7.5	15	22.5	30	37.5
	Months	6	12	24	36	48	60
Change the engine oil		●	●	●	●	●	●
Change the engine oil filter		●	●	●	●	●	●
Clean the engine oil pick-up filter					●		
Check the engine oil pressure				●		●	
Check/adjust the valve clearances (1)			●	●	●	●	●
Check the tension of the timing belts (1)			●		●		●
Renew the timing belts				●		●	
Check and clean the spark plugs. Renew if necessary				●		●	
Check and clean the air filter (1)			●		●		●

List of operations with frequency (distance or time interval*)	km x1000	1	12	24	36	48	60
	miles x1000	0.6	7.5	15	22.5	30	37.5
	Months	6	12	24	36	48	60
Change the air filter				●		●	
Check throttle body synchronisation and idle speed setting (1)			●	●	●	●	●
Check the brake and clutch fluid levels		●	●	●	●	●	●
Change the clutch and brake fluid					●		
Check and adjust the brake and clutch control cables			●	●	●	●	●
Check/lubricate the throttle/choke cables			●	●	●	●	●
Check tyre pressure and wear		●	●	●	●	●	●
Check the brake pads. Renew if necessary		●	●	●	●	●	●
Check the steering head bearings				●		●	
Check the drive chain tension, alignment and lubrication		●	●	●	●	●	●
Check the clutch disc pack. Renew if necessary (1)			●	●	●	●	●
Check the rear wheel cush drive				●		●	
Check the wheel hub bearings				●		●	
Check the indicators and lighting			●	●	●	●	●
Check tightness of nuts and bolts securing the engine to the frame			●	●	●	●	●
Check the sidestand			●	●	●	●	●
Check tightness of the front wheel axle nut			●	●	●	●	●
Check tightness of the rear wheel axle nut			●	●	●	●	●
Check the external fuel hoses			●	●	●	●	●

List of operations with frequency (distance or time interval*)	km x1000	1	12	24	36	48	60
	miles x1000	0.6	7.5	15	22.5	30	37.5
	Months	6	12	24	36	48	60
Change the front fork oil					●		
Check the forks and rear shock absorber for oil leaks			●	●	●	●	●
Check the front sprocket retaining bolts			●	●	●	●	●
General lubrication and greasing			●	●	●	●	●
Check and recharge the battery			●	●	●	●	●
Road test the motorcycle		●	●	●	●	●	●
General cleaning			●	●	●	●	●

* Service operation to be carried out in accordance with the specified distance or time intervals (km or months), whichever occurs first.

(1) Operation to be carried out only at the specified distance intervals.

Programmed maintenance plan: operations to be carried out by the customer

List of operations with type of intervention (distance or time interval*)	km x1000	1
	miles x1000	0.6
	Months	6
Checking the engine oil level		●
Check the brake and clutch fluid levels		●
Check tyre pressure and wear		●
Check the drive chain tension and lubrication		●
Check the brake pads. If necessary, contact your dealer to renew pads		●

* Service operation to be carried out in accordance with the specified distance or time intervals (km or months), whichever occurs first.

Technical data

Weights

Without fluids and battery:
169 kg (1100);
168 kg (1100S).
Fully laden: 390 kg.

Warning
Failure to observe weight limits could result in poor handling and impair the performance of your motorcycle, and could result in loss of control.

Overall dimensions (mm) (fig. 105)

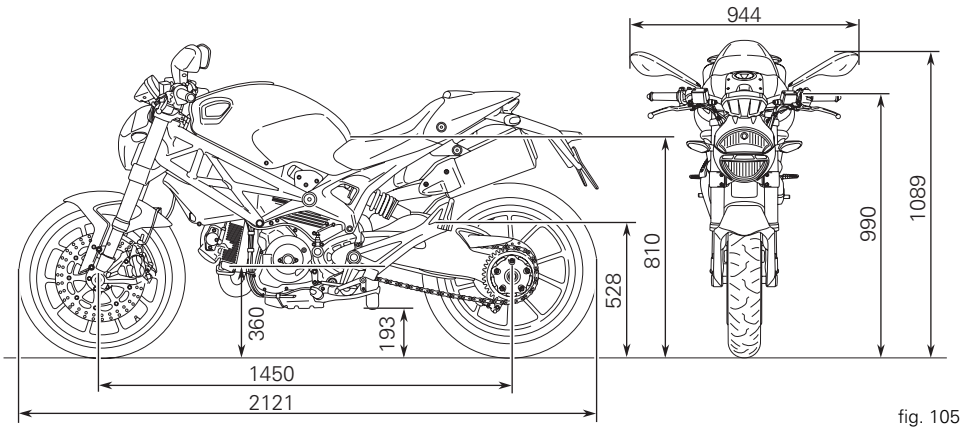

fig. 105

FLUIDS AND LUBRICANTS	TYPE	DM^3 (LITRES)
Fuel tank, including a reserve of 3.5 dm^3 (litres)	Unleaded fuel with 95 fuel octane rating (at least)	15
Sump and filter	SHELL - Advance Ultra 4	3.5
Front/rear brake and clutch circuits	SHELL - Advance Brake DOT 4	—
Protection for electrical contacts	SHELL - Advance Contact Cleaner	—
Front fork	SHELL - Advance Fork 7.5 or Donax TA	524±2.5 cm^3, per leg (1100) 140 mm measured without spring, per leg (1100S)

Important
Do not use additives in fuel or lubricants.

Engine

Longitudinal 90° "L" twin cylinder, four-stroke.
Bore (mm):
98.
Stroke (mm):
71.5.
Total displacement cm^3:
1078.
Compression ratio:
10.7±0.5:1.
Max power at crankshaft (95/1/EC):
69.8 kW - 95 CV at 7500 rpm.
Max torque at crankshaft (95/1/EC):
103 Nm - 10.5 kgm at 6000 rpm.

Timing system

DESMODROMIC with two valves per cylinder, operated by four rocker arms (two opening rockers and two closing rockers) and one overhead camshaft. Driven by the crankshaft through spur gears, timing belt pulleys and toothed timing belts.

Desmodromic timing system (fig. 106)

1) Opening (or upper) rocker arm.
2) Opening (upper) shim.
3) Half rings.
4) Closing (or lower) shim.
5) Return spring for closing rocker.
6) Closing (or lower) rocker arm.
7) Camshaft.
8) Valve.

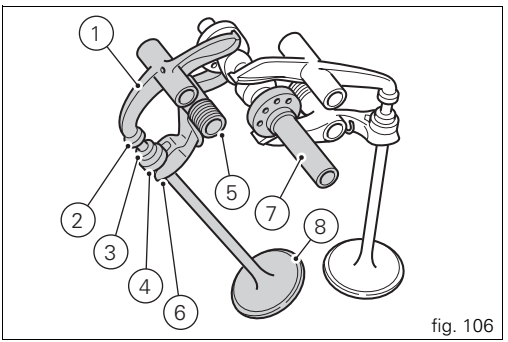

fig. 106

Performance data

Maximum speed in any gear should be reached only after the correct running-in period with the motorcycle properly serviced at the recommended intervals.

Important

Failure to follow these instructions will release Ducati Motor Holding S.p.A. from any liability for any engine damage or shortened engine life.

Spark plugs

Make:
Champion.
Type:
RA6HC.

Alternative

Make:
NGK.
Type:
DCPR8E.

Fuel system

SIEMENS indirect electronic injection.
Throttle body diameter:
45 mm.
Injectors per cylinder: 1.
Holes per injector: 8.
Fuel supply: 95-98 RON.

Brakes

Front

Type:
drilled steel disc.
2 discs.
Disc diameter:
320 mm.
Hydraulically operated by a control lever on right handlebar.
Braking surface, cm^2:
44 per disc.
Differential bore brake calipers.
Make and type:
BREMBO P4.32 K, 4 Piston.
Friction material:
FERIT I/D 450 FF.
Master cylinder type:
PR 18/19.

Rear

Type:
with fixed drilled steel disc.
Disc diameter:
245 mm.
Hydraulically operated by pedal on right side.
Braking surface:
25 cm^2.
Brake caliper:
34 mm Ø piston.
Make and type:
P 34 C.
Friction material:
FERIT I/D 450 FF.
Master cylinder type:
PS 11.

Warning
The brake fluid used in the brake system is corrosive. In the event of accidental contact with eyes or skin, wash the affected area with copious amounts of running water.

Transmission

Dry clutch operated by a control lever on left handlebar.
Transmission from engine to gearbox input shaft via spur gears.
Front sprocket/clutch sprocket ratio:
32/59.
Gearbox:
6-speed;
with constant mesh gears, gearchange pedal on left.

Final drive ratio:
15/39.
Total gear ratios:
1st 15/37
2nd 17/30
3rd 20/27
4th 22/24
5th 24/23
6th 28/24

Drive transmitted from gearbox to rear wheel via chain:
Make:
REGINA.
Type:
525 ZRPK.
Dimensions:
5/8" x 1/4".
No. of links:
103 + 1 open.

Important

The above gear ratios are approved and should not be modified under any circumstances.

However, if you wish to tune up your motorcycle for competitions or special tracks, Ducati Motor Holding S.p.A. will be pleased to provide information about the special ratios available. Please contact a Ducati Dealer or authorized Service Centre.

Warning

For replacement of the rear sprocket, contact a Ducati Dealer or authorized Service Centre.
Incorrect replacement of this component could seriously endanger rider and passenger safety and cause irreparable damage to the motorcycle.

Frame

Hybrid trellis frame with chromium-molybdenum coated steel tubes, rear aluminium subframe.
Steering angle (on each side):
32°.
Steering head angle:
22.8°.
Trail mm:
87.

Wheels

Five Y-spokes, light-alloy rims.

Front

Make:
BREMBO.
Dimensions:
MT3.50x17".

Rear

Make:
BREMBO.
Dimensions:
MT5.50x17".
Both wheels have removable axles.

Tyres

Front

Radial tubeless tyre.
Size:
120/70-ZR17.

Rear

Radial tubeless tyre.
Size:
180/55-ZR17.

Suspension

Front

Upside-down hydraulic forks.
Stanchion diameter: 43 mm.
Travel along leg axis: 130 mm.

Rear

Progressive monoshock with adjustable rebound, compression and spring preload.
Shock absorber travel: 58.5 mm.
Rear wheel travel: 148 mm.

Notes

Do not carry out any operations on the motorcycle that could modify the technical characteristics for which approval was obtained.

Exhaust system

Equipped with catalytic converter in compliance with Euro 3 emission regulations.
USA model: not catalyzed.

Colour schemes

1100

Ducati anniversary red, code 473.101 (PPG);
Transparent, code 228.880 (PPG);
Red frame with grey wheels.

Silver Matt, code 928D998 (PAL);
Transparent, code 923i1281 (PAL);
Red frame and silver matt wheels.

Gloss black, code 248.514 (PPG);
Transparent, code 228.880 (PPG);
Red frame and silver matt wheels.

1100S

Ducati anniversary red, code 473.101 (PPG);
Transparent, code 228.880 (PPG);
Red frame with gold wheels.

Pearl white, code 490.019 (PPG);
Transparent, code 228.880 (PPG);
Matt black frame with gold wheels.

Electrical system

The main components of the electrical system are:
HEADLIGHT:
low beam: H7 (12 V-55 W).
main beam: H7 (12 V-55 W).
side light: H6 (12 V-6 W).
Electrical controls on handlebars:
turn signals:
bulb type: RY10W (12 V-10 W).
Horn.
Brake light switches.
Battery, 12 V-10 Ah.
Alternator, 12 V-480 W.
ELECTRONIC VOLTAGE REGULATOR (rectifier), protected by a 30 A fuse located next to the ECU (10, fig. 108).
Starter motor, 12 V-0.7 kW.
Tail light and brake light:
LED.
Number plate light:
bulb type: C5W (12 V-5 W).

Notes

To replace the bulbs, refer to the paragraph “Changing bulbs” on page 91.

E

Fuses

The electrical system components are protected by eight fuses located in the fusebox. Only six of these fuses are connected to the electrical system, the other two are spares. Refer to the table below to identify the circuits protected by the various fuses and their ratings in amps.

KEY TO FUSEBOX (fig. 107)		
Pos.	Consumers	Rating
1	Key ON	10 A
2	Side lights, high/low beam	15 A
3	Consumers	15 A
4	Instrument panel	5 A
5	Injection	20 A
6	ECU	5 A
7	Spare	20 A
8	Spare	5 A

The main fusebox is located on the right-hand side of the motorcycle (9, fig. 107).
The fuses used can be accessed by removing the protective cover (A).

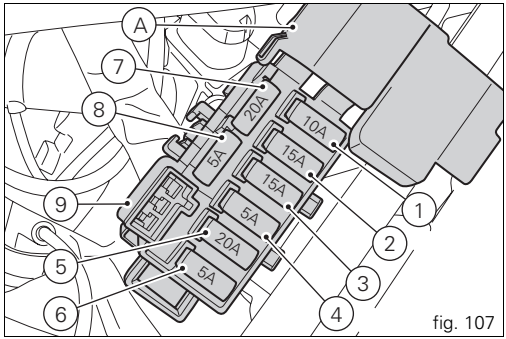

fig. 107

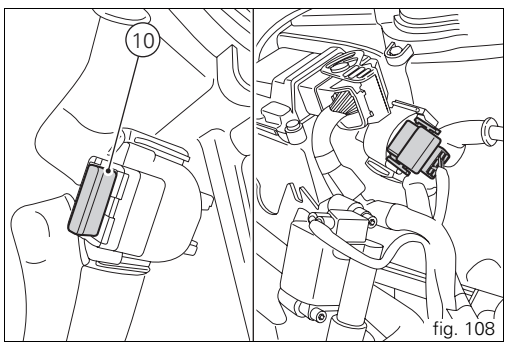

fig. 108

A blown fuse can be identified by a broken filament (11, fig. 109).

Important
To avoid possible short circuits, switch the ignition key to OFF before renewing the fuse.

Warning
Never use a fuse with a rating other than that specified. Failure to observe this rule may damage the electric system or even cause fire.

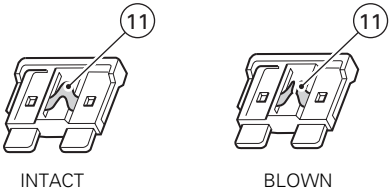

fig. 109

Key to the electrical system/injection system diagram

1) Right-hand handlebar switch
2) Key switch
3) Horizontal cylinder spark plug
4) Vertical cylinder spark plug
5) Starter motor
6) Starter contactor
7) Battery
8) Main fuse
9) Regulator
10) Alternator
11) Rear right turn signal
12) Tail light
13) Number plate light
14) Rear left turn signal
15) Fuel tank
16) Horizontal cylinder exhaust lambda sensor
17) Injection relay
18) Self-diagnosis/DDA
19) Horizontal cylinder coil
20) Vertical cylinder coil
21) Headlight
22) MAP sensor
23) Horizontal cylinder injector
24) Vertical cylinder injector
25) Throttle position sensor
26) Rpm/timing sensor
27) Cylinder temperature sensor
28) Speed sensor
29) Sidestand
30) Horn
31) Neutral switch
32) Oil pressure switch
33) Rear brake light switch
34) ECU
35) Fuses
36) Clutch switch
37) Front brake light switch
38) Left-hand handlebar switch
39) Transponder antenna
40) Air temperature sensor
41) Vertical cylinder exhaust lambda sensor
42) Instrument panel
43) Lights relay
44) Front left turn signal
45) Front right turn signal
46) Valve motor
47) Stepper motor

Wire colour code

B Blue
W White
V Violet
BK Black
Y Yellow
R Red
LB Light blue
GR Grey
G Green
BN Brown
O Orange
P Pink

Notes

The electrical system wiring diagram can be found at the end of this manual.

Routine maintenance record

KM	NAME OF DUCATI SERVICE	MILEAGE	DATE
1,000			
12,000			
24,000			
36,000			
48,000			
60,000			

For United States of America Version Only

Reporting of safety defects

If you believe that your vehicle has a defect which could cause a crash or could cause injury or death, you should immediately inform the National Highway Traffic Safety Administration (NHTSA) in addition to notifying Ducati North America. If NHTSA receives similar complaints, it may open an investigation, and if it finds that a safety defect exists in a group of vehicles, it may order a recall and remedy campaign. However, NHTSA cannot become involved in individual problems between you, your dealer, or Ducati North America. To contact NHTSA, you may either call the Auto Safety Hotline toll-free at 1-800-424-9393 (or 366-0123 in Washington, D.C. area) or write to: NHTSA, 1200 New Jersey Avenue SE W43-488, Washington, D.C. 20590. You can also obtain other information about motor vehicle safety from the Hotline.

Safety warnings

Traffic Rules vary from jurisdiction to jurisdiction. Know the regulations in your jurisdiction before riding this motorcycle.

Warning

This motorcycle is designed and intended for use on streets and other smooth, paved areas only. Do not use this motorcycle on unpaved surfaces. Such use could lead to upset or other accident.

Noise emission warranty

Ducati Motor S.p.A. warrants that this exhaust system, at the time of sale, meets all applicable U.S. EPA Federal noise standards. This warranty extends to the first person who buys this exhaust system for purposes other than resale, and to all subsequent buyers. Warranty claims should be directed to: Ducati North America, Inc.,
10443 Bandley Drive, Cupertino, California, 95014
Tel: 001.408.253.0499 - Fax: 001.408.253.4099

Noise and exhaust emission control system information

Source of Emissions

The combustion process produces carbon monoxide and hydrocarbons. Control of hydrocarbons is very important because under certain conditions, they react to form photochemical smog when subjected to sunlight. Carbon monoxide does not react in the same way, but is toxic. Ducati utilizes lean carburetor settings and other systems to reduce carbon monoxide and hydrocarbons.

Exhaust Emission Control System

The Exhaust Emission Control System is composed of lean carburetor settings, and no adjustments should be made except idle speed adjustments with the throttle stop screw. The Exhaust Emission Control System is separate from the crankcase emission control system.

Crankcase Emission Control System

The engine is equipped with a closed crankcase system to prevent discharging crankcase emissions into the atmosphere. Blow-by gas is returned to the combustion chamber through the air cleaner and the throttle body.

Evaporative Emission Control System

California motorcycles are equipped with an evaporative emission control system which consists of a charcoal canister and associated piping. This system prevents the escape of fuel vapors from the throttle body and fuel tank.

Tampering warning

Tampering with Noise Control System Prohibited. Federal Law prohibits the following acts or causing thereof:
(1) the removal or rendering inoperative by any person, other than for purposes of maintenance, repair, or replacement, of any device or element of design incorporated into any new vehicle for the purpose of noise control prior to its sale or delivery to the ultimate purchaser or while it is in use; or
(2) the use of the vehicle after such device or element of design has been removed or rendered inoperative by any person.

Among those acts presumed to constitute tampering are the acts listed below:

(1) Removal of, or puncturing the muffler, baffles, header pipes or any other component which conducts exhaust gases.
(2) Removal or puncturing of any part of the intake system.
(3) Lack of proper maintenance.
(4) Replacing any moving part of the vehicle, or parts of the exhaust or intake system, with parts other than those specified by the manufacturer.
This product should be checked for repair or replacement if the motorcycle noise has increased significantly through use. Otherwise, the owner may become subject to penalties under state and local ordinances.

Problems that may affect motorcycle emissions

If you are aware of any of the following symptoms, have the vehicle inspected and repaired by your local Ducati dealer.
Symptoms:
Hard starting or stalling after starting.
Rough idle.
Misfiring or backfiring during acceleration.
After-burning (backfiring).
Poor performance (driveability) and poor economy.

Riding safety

The points given below are applicable for every day motorcycle use and shoud be carefully observed for safe and effective vehicle operation.
A motorcycle does not provide the impact protection of an automobile, so defensive riding in addition to wearing protective apparel is extremely important.
Do not let protective apparel give you a false sense of security.
Before changing lanes, look over your shoulder to make sure the way is clear. Do not rely solely on the rear view mirror; you may misjudge a vehicle's distance and speed, or you may not see it at all.
When going up steep slopes, shift to a lower gear so that there is plenty of power to spare rather than overloading the engine.
When applying the brakes, use both the front and rear brakes. Applying only one brake for sudden braking may cause the motorcycle to skid and lose control.
When going down long slopes, control vehicle speed by closing the throttle. Use the front and rear brakes for auxiliary braking.
Riding at the proper rate of speed and avoiding unnecessarily fast acceleration are important not only for safety and low fuel consumption but also for long vehicle life and quieter operation.
When riding in wet conditions or on loose roadway surfaces, the ability to maneuver will be reduced. All of your actions should be smooth under these conditions. Sudden acceleration, braking or turning may cause loss of control. When the roadway is wet, rely more on the throttle to control vehicle speed and less on the front and rear brakes.
The throttle should also be used judiciously to avoid skidding the rear wheel from too rapid acceleration or deceleration.
On rough roads, exercise caution, slow down, and grip the fuel tank with your knees for better stability.
When quick acceleration is necessary as in passing, shift to a lower gear to obtain the necessary power.
Do not down shift at too high an r.p.m. to avoid damage to the engine from overreving.
Avoiding unnecessary weaving is important to the safety of both the rider and other motorists.
Do not exceed the legal speed limit or drive too fast for existing conditions. High speed increases the influence of any condition affecting stability and the loss of control.
Operate motorcycle only at moderate speed and out of traffic until you have become thoroughly familiar with its operation and handling characteristics under all conditions.
This is a very high performance motorcycle, designed and intended for use by experienced careful riders only!
A new motorcycle must be operated according to a special break-in procedure (see Running in recommendations).

Warning

Before starting engine, check for proper operation of brake, clutch, shifter, throttle controls, correct fuel and oil supply.

Gasoline is extremely flammable and is explosive under certain conditions. Refuell in a well ventilated area with the engine stopped. Do not smoke or allow open flames or sparks when refuelling or servicing the fuel system. Always close the fuel petcock when the engine is not running to prevent flooding of the throttle body. Do not overfill fuel tank (see instructions page 40).
Motorcycle exhaust contains poisonous carbon monoxide gas. Do not inhale exhaust gases and never run the engine in a closed garage or confined area.
Use only Ducati approved parts and accessories.
This motorcycle was not intended to be equipped with a sidecar or to be used to tow any trailer or other vehicle. Ducati does not manufacture sidecars or trailers and cannot predict the effects of such accessories on handling or stability, but can only warn that the effects will be adverse and any damage to motorcycle components caused by the use of such accessories will not be remedied under warranty.

Warning

Do not ride the motorcycle with helmets attached to the hook; the helmets could cause an accident by distracting the operator or interfering with normal vehicle operation.

Protective apparel

Always wear a helmet. Most motorcycle accident fatalities are due to head injuries.
For safety eye protection, gloves, and high top, sturdy boots should also be worn.

The exhaust system becomes very hot during operation, never touch the exhaust system. Wear clothing that fully covers your legs. Do not wear loose clothing which could catch on the control levers, footrests, wheels, or chain. Any amount of alcohol will significantly interfere with your ability to safely operate your motorcycle. Don't drink and ride.

Vehicle identification number (VIN)

Every Ducati motorcycle is identified by two identification numbers (see page 9). Figure A specifically shows the frame identification numbers.

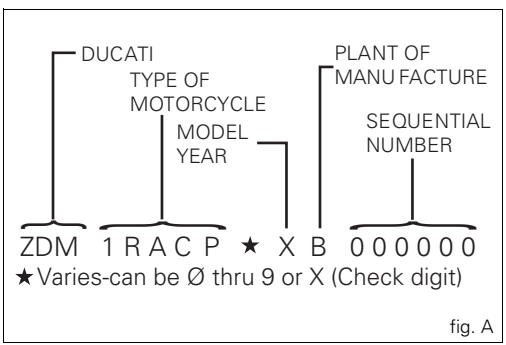

fig. A

Label location (fig. B)

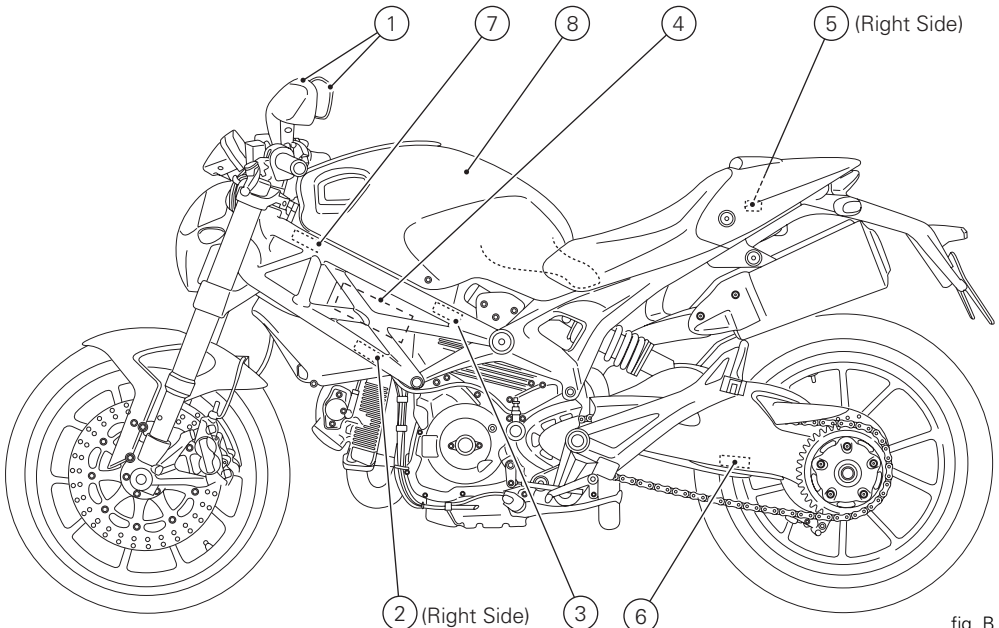

fig. B

OBJECT IN MIRROR ARE
CLOSER THAN THEY APPEAR
DUCATI 1

1

Manufactured by **DUCATI** *MOTORHOLDING spa* DATE: /

GVWR: Lbs (kg)
GAWR front: Lbs (kg) with tire, RIM at PSI cold.
GAWR rear: Lbs (kg) with tire, RIM at PSI cold.
This vehicle conforms to all applicable Federal Motor Vehicle Safety standards in effect on the date of manufacture shown above. Type classification: Motorcycle

Vehicle I.D. No.:

DUCATI 2

2

MANUFACTURED BY / FABRIQUE PAR : **DUCATI** *MOTORHOLDING* spa
TYPE OF VEHICLE / TYPE DE VEHICULE / MC DATE : **/****
GVWR / PNBV * * * * KG. VLN. / N.LV. : ZDM**********

DANN / PNBV KG	TRUPPEN-LADEGEW. / CHARGE		OCCUPES, PROG. / OCCUPANTS, A PRIORI PNEU / TIRES
***	*********	********	***
***	*********	********	***

THE VEHICLE CONFORMS TO ALL APPLICABLE STANDARDS PRESCRIBED UNDER THE CANADIAN MOTOR VEHICLE SAFETY REGULATIONS IN EFFECT ON THE DATE OF MANUFACTURE.
CE VEHICULE EST CONFORME A TOUTES LES NORMES QUI LE SONT APPLICABLES EN VERTU DU REGLEMENT SUR LA SECURITE DES VEHICULES AUTOMOBILES DU CANADA EN VIGUEUR A LA DATE DE SA FABRICATION.

2 (Only Canada)

VEHICLE EMISSION CONTROL LABEL
Engine displacement: cc, Engine family:
This vehicle conforms to U.S. EPA and California regulations
Applicable to model year new motorcycles.
Evap family:

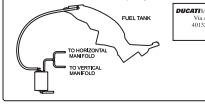

DUCATI *MOTORHOLDING spa*
Via A.C.Ducati,3
40132 BOLOGNA
ITALY

3

VEHICLE EMISSION CONTROL INFORMATION

Engine displacement: cc
Engine family:
Engine exhaust control system:
Evap family:

THIS VEHICLE CONFORMS TO U.S. EPA AND CALIFORNIA REGULATIONS APPLICABLE TO MODEL YEAR NEW MOTORCYCLES AND IS CERTIFIED TO 1.4 HC G/KM ENGINE FAMILY EXHAUST EMISSION STANDARD IN CALIFORNIA

ENGINE TUNE-UP SPECIFICATIONS

ITEM	SPECIFICATIONS	INSTRUCTIONS
IGNITION TIMING:	° BTDC at idle speed	No adjustment
IDLE SPEED (RPM):	– rpm	No adjustment
IDLE MIXTURE:		No adjustment
VALVE CLEARANCE (in & ex):	Opening – mm	See Service Manual
	Closing – mm	
SPARK PLUG: CHAMPION		
SPARK PLUG GAP (mm):	OIL:	
	FUEL: Unleaded gasoline	

DUCATI *MOTORHOLDING spa* - BOLOGNA - ITALY

4

HELMET HOLDER
UNDER THE SEAT

5

Tensione catena (sul cavalletto laterale)
Chain Tension Adjustment (on side stand)

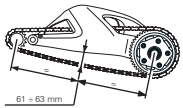

6

MOTORCYCLE NOISE EMISSION CONTROL INFORMATION

THIS MOTORCYCLE, MOTORCYCLE,
MEETS EPA NOISE EMISSION REQUIREMENTS OF dBA AT RPM BY THE FEDERAL TEST PROCEDURE.
MODIFICATIONS WHICH CAUSE THIS MOTORCYCLE TO EXCEED FEDERAL NOISE STANDARDS ARE PROHIBITED BY FEDERAL LAW.
SEE OWNER'S MANUAL.

DUCATI

7

CAUTION
NEVER FILL TANK SO FUEL LEVEL RISES INTO FILLER NECK. IF TANK IS OVERFILLED, HEAT MAY CAUSE FUEL TO EXPAND AND FLOW INTO EVAPORATIVE EMISSION CONTROL SYSTEM RESULTING IN HARD STARTING AND ENGINE HESITATION.

8

ATTENZIONE! Per evitare perdite di carburante dal tubo di sfiato, evitare di sollevare il serbatoio quando questo contiene oltre la metà.

ATTENTION! To avoid fuel leaks from the breather pipe, do not lift the tank when it is more than half full.

9

California evaporation emission system (fig. C)

Important

In the event of fuel system malfunction, contact Ducati's authorized Service Centres.

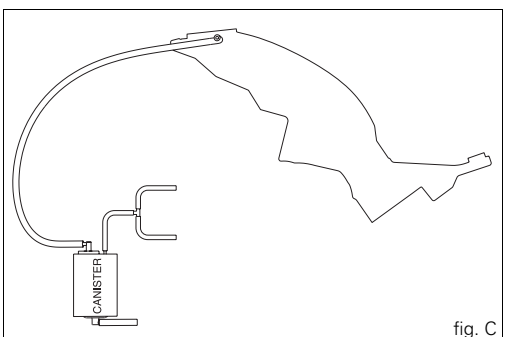

fig. C

Ducati limited warranty on emission control system

Ducati North America, Inc., 10443 Bandley Drive Cupertino, California, 95014 warrants that each new 1998 and later Ducati motorcycle, that includes as standard equipment a headlight, tail-light and stoplight, and is street legal:
A) is designed, built and equipped so as to conform at the time of initial retail purchase with all applicable regulations of the United States Environmental Protection Agency, and the California Air Resources Board; and
B) is free from defects in material and workmanship which cause such motorcycle to fail to conform with applicable regulations of the United States Environmental Protection Agency or the California Air Resources Board for a period of use of 30,000 kilometers (18,641 miles), or 5 (five) years from the date of initial retail delivery, whichever first occurs.

I. Coverage

Warranty defects shall be remedied during customary business hours at any authorized Ducati motorcycle dealer located within the United States of America in compliance with the Clean Air Act and applicable regulations of the United States Environmental Protection Agency and the California Air Resources Board. Any part or parts replaced under this warranty shall become the property of Ducati.
In the state of California only, emissions related warranted parts are specifically defined by that state's Emissions Warranty Parts List. These warranted parts are: carburetor and internal parts; intake manifold; fuel tank, fuel injection system; spark advance mechanism; crankcase breather; air cutoff valves; fuel tank cap for evaporative emission

controlled vehicles; oil filler cap; pressure control valve; fuel/vapor separator; canister; igniters; breaker governors; ignition coils; ignition wires; ignition points, condensers, and spark plugs if failure occors prior to the first scheduled replacement, and hoses, clamps, fittings and tubing used directly in these parts. Since emission related parts may vary from model to model, certain models may not contain all of these parts and certain models may contain functionally equivalent parts.
In the state of California only, Emission Control System emergency repairs, as provided for in the California Administrative Code, may be performed by other than an authorized Ducati dealer. An emergency situation occurs when an authorized Ducati dealer is not reasonably available, a part is not available within 30 days, or a repair is not complete within 30 days. Any replacement part can be used in an emergency repair. Ducati will reimburse the owner for the expenses, including diagnosis, not to exceed Ducati's suggested retail price for all warranted parts replaced and labor charges based on Ducati's recommended time allowance for the warranty repair and the geographically appropriate hourly labor rate. The owner may be required to keep receipts and failed parts in order to receive compensation.

II. Limitations

This Emission Control System Warranty shall not cover any of the following:
A. Repair or replacement required as a result of
(1) accident,
(2) misuse,
(3) repairs improperly performed or replacements improperly installed,
(4) use of replacement parts or accessories not conforming to Ducati specifications which adversely affect performance and/or
(5) use in competitive racing or related events.
B. Inspections, replacement of parts and other services and adjustments required for routine maintenance.
C. Any motorcycle on which odometer mileage has been changed so that actual mileage cannot be readily determined.

III. Limited liability

A. The liability of Ducati under this Emission Control Systems Warranty is limited solely to the remedying of defects in material or workmanship by an authorized Ducati motorcycle dealer at its place of business during customary business hours. This warranty does not cover inconvenience or loss of use of the motorcycle or transportation of the motorcycle to or from the Ducati dealer. Ducati shall not be liable for any other expenses, loss or damage, whether direct, incidental, consequential or exemplary arising in connection with the sale or use of or inability to use the Ducati motorcycle for any purpose. Some states do not allow the exclusion or limitation of any incidental or consequential damages, so the above limitations may not apply to you.

B. No express emission control system warranty is given by Ducati except as specifically set forth herein. Any emission control system warranty implied by law, including any warranty of merchantability or fitness for a particular purpose, is limited to the express emission control systems warranty terms stated in this warranty. The foregoing statements of warranty are exclusive and in lieu of all other remedies. Some states do not allow limitations on how long an implied warranty lasts so the above limitation may not apply to you.
C. No dealer is authorized to modify this Ducati Limited Emission Control Systems Warranty.

IV. Legal rights

This warranty gives you specific legal rights, and you may also have other rights which vary from state to state.

V. This warranty is in addition to the Ducati limited motorcycle warranty.

VI. Additional information

Any replacement part that is equivalent in performance and durability may be used in the performance of any maintenance or repairs. However, Ducati is not liable for these parts.
The owner is responsible for the performance of all required maintenance. Such maintenance may be performed at a service establishment or by any individual. The warranty period begins on the date the motorcycle is delivered to an ultimate purchaser.
Ducati North America, Inc.
10443 Bandley Drive
Cupertino, California, 95014
Tel: 001.408.253.0499
Fax: 001.408.253.4099
E-mail: customerservice@ducatiusa.com
Web site: www.ducatiusa.com

Routine Maintenance Record

KM	MI	DUCATI SERVICE NAME	MILEAGE	DATE
1,000	600			
12,000	7,500			
24,000	15,000			
36,000	22,500			
48,000	30,000			
60,000	37,500			

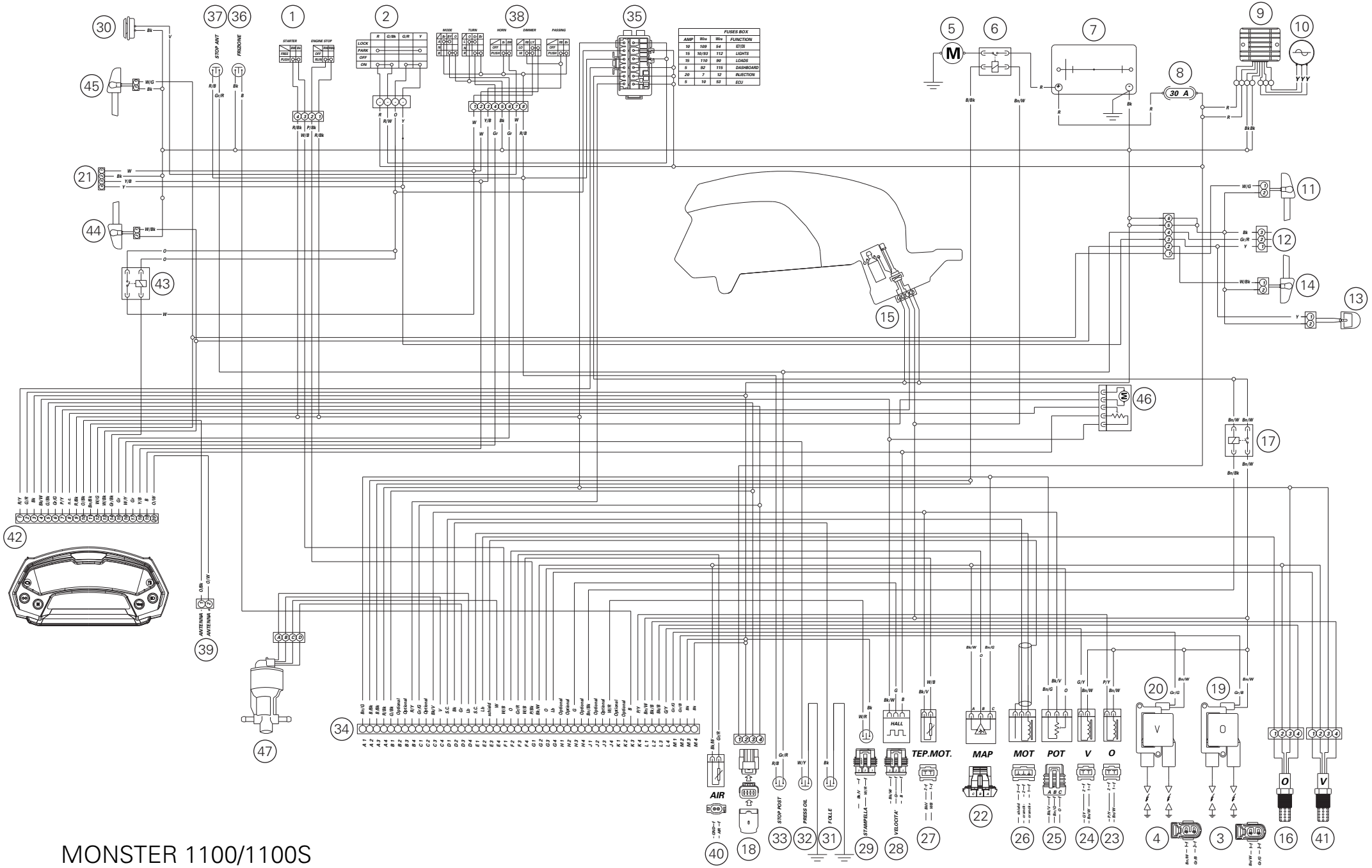

MONSTER 1100/1100S

Stampato 06/2009 Cod. 913.7.135.1F

Ducati Motor Holding spa
www.ducati.com

Via Cavalieri Ducati, 3
40132 Bologna, Italia
Tel. +39 051 6413111
Fax +39 051 406580