Owner's manual

MONSTER

MONSTER 821

DUCATI

Owner's manual

ENGLISH

MONSTER

MONSTER 821

This manual forms an integral part of the motorcycle and must be kept with it whole its service life.
If the motorcycle is resold, the manual must always be handed over to the new owner.
This manual must be preserved with care. If it lost or becomes damaged, contact a Ducati Dealer or authorised Service Centre without delay to obtain a new copy of the manual.

The quality standards and safety of Ducati motorcycles are steadily improved as new design solutions, equipment and accessories are developed. While the information contained in this manual is current at the time of going to print, Ducati Motor Holding S.p.A. reserves the right to make changes at any time without notice and without any obligations. For this reason, the illustrations in this manual might differ from your motorcycle.

Enjoy your ride!

Table of contents

Controls 147

Introduction

Safety guidelines

We would like to welcome you among Ducati enthusiasts, and congratulate you on your excellent choice of motorcycle. We think you will ride your Ducati motorcycle for long journeys as well as short daily trips. Ducati Motor Holding S.p.A. wishes you smooth and enjoyable riding.

Your motorcycle is the result of Ducati Motor Holding S.p.A.'s on-going research and development efforts. It is important that you preserve its quality standard by strictly observing the maintenance plan and using genuine spare parts. This manual provides instructions on minor maintenance operations. Major maintenance operations are described in the Service Manual available to Ducati Authorised Service Centres.
In your own interest, for your safety and in order to guarantee product reliability, you are strongly advised to refer to our authorised Dealers and Service Centres for any operations listed in the scheduled maintenance chart, see page 229.

Our highly skilled staff have access to special implements and appropriate equipment required to perform any servicing job at best, and use Ducati original spare parts only as the best guarantee for full interchangeability, smooth running and long life.

All Ducati motorcycles come with a Warranty Card. The warranty does not apply to motorcycles used in racing competitions.
Tampering with or altering any components, even partially, will make the warranty null and void effective immediately. Improper or poor maintenance, using other than original spare parts or parts not expressly approved by Ducati may invalidate your warranty rights and lead to damage or loss of performance.

Your safety and that of other road users are very important. Ducati Motor Holding S.p.A. recommends that you ride responsibly.
Before using your motorcycle for the first time, read this entire manual carefully and closely follow the guidelines outlined in it. The manual provides full information on proper motorcycle operation and

maintenance. In case of any doubts, please call a Dealer or Authorised Service Centre.

Warning symbols used in the manual

To alert you to potential hazards that could potentially harm you or other persons, the following safety alerts have been used:

- Safety labels on motorcycle;
- Safety messages preceded by a warning symbol and the word WARNING or IMPORTANT.

Warning

Failure to comply with these instructions may put you at risk, and could lead to severe injury or even death of the rider or other persons.

Important

Possibility of damaging the motorcycle and/or its components.

Note

Additional information about the current operation.

The terms RIGHT and LEFT refer to the motorcycle viewed from the riding position.

Intended use

This motorcycle must be used only on asphalted roads or on level, regular pavement.
This motorcycle may not be used for riding on dirt trails or for off-road riding.

Warning

Off-road riding may lead to loss of control and result in vehicle damage, personal injuries or even death.

Warning

This motorcycle may not be used to tow any trailers or with a side-car attached; this can lead to loss of control and result in an accident.

This motorcycle carries the rider and can carry a passenger.

Warning

The total weight of the motorcycle in running order including rider, passenger, luggage and additional accessories should not exceed 390 kg/859 lb.

Rider's obligations

All riders must hold a valid licence.

Warning

Riding without a licence is illegal and is prosecuted by law. Always make sure you have your licence with you when riding. Do not let inexperienced riders or persons without a valid licence use your motorcycle.

Do not ride under the influence of alcohol and/or drugs.

Warning

Riding under the influence of alcohol and/or drugs is illegal and is prosecuted by law.

Do not take prescription or other drugs before riding unless you have consulted your doctor about their side effects.

Warning
Some medications and drugs may cause drowsiness or other effects that slow down reaction time and the rider's ability to control the motorcycle, possibly leading to an accident.

Some states require vehicle insurance.

Warning
Check your state laws. Obtain insurance coverage and keep your insurance document secure with the other motorcycle documents.

To protect rider and passenger safety, some states mandate the use of a certified helmet.

Warning
Check your state laws. Riding without a helmet may be punishable by law.

Warning
Riders without helmets are more likely to suffer severe bodily injury or die if they are in an accident.

Warning
Check that your helmet complies with safety specifications, permits good vision, is the right size for your head, and carries a certification label indicating that it conforms to the standards in force in your state. Road traffic laws differ from state to state. Learn about traffic laws in your state before riding and always obey them.

Important
Before using the motorcycle, check for no labels on the rear-view mirrors; otherwise remove them.

Rider's training

Accidents are frequently due to inexperience. Riding, manoeuvres and braking must performed in a different way than on the other vehicles.

Warning

Untrained riders or a wrong use of the vehicle may lead to loss of control, serous injuries or even death.

Apparel

Riding gear is very important for safety. Unlike cars, a motorcycle offers no impact protection in an accident.

Proper riding gear includes helmet, eye protection, gloves, boots, long sleeve jacket and long pants.

- The helmet must meet the requirements listed at page 9; if your helmet does not have a visor, use suitable eye wear;
- Use five-finger gloves made from leather or abrasion-resistant material;
- Riding boots or shoes must have non-slip soles and offer ankle protection;
- Jacket, trousers or riding suit must be made from leather or abrasion-resistant material and have high-visibility colours and inserts.

Important

Never wear loose clothing, items or accessories that may become tangled in motorcycle parts.

Important

For your safety, always wear suitable protective gear, regardless of season and weather.

Important

Have your passenger wear proper protective clothing.

Safety "Best Practices"

These few simple operations are critical to people safety and to preserving the full performance of your motorcycle. Never forget to perform them before, while and after riding.

Important

Closely follow the indications provided at chapter "Riding the motorcycle" during the running-in period.
Failure to follow these instructions releases Ducati Motor Holding S.p.A. from any liability whatsoever for any engine damage or shorter engine life.

Warning

Before riding your motorcycle, become familiar with the controls you will need to use when riding.

Perform the checks recommended in this manual before each ride (see page page 180).

Warning

Failure to carry out these checks before riding may lead to motorcycle damage and injury to rider and/or passenger.

Warning

Start the engine outdoors or in a well ventilated area. The engine should never be started or run indoors.
Exhaust gases are poisonous and may lead to loss of consciousness or even death within a short time.
Use proper body position while riding and ensure your passenger does the same.

Important

Rider must hold the handlebar with both hands at ALL TIMES while riding.

Important

Both rider and passenger should keep their feet on the footpegs when the motorcycle is in motion.

Important

The passenger should always hold on to the grab handles under the seat with both hands.

Important
Be very careful when tackling road junctions, or when riding in areas near exits from private grounds, car parks or on slip roads to access motorways.

Important
Be sure you are clearly visible and do not ride within the blind spot of vehicles ahead.

Important
ALWAYS signal your intention to turn or pull to the next lane in good time using the suitable turn indicators.

Important
Park your motorcycle where no one is likely to knock against it, and use the side stand. Never park on uneven or soft ground, or your motorcycle may fall over.

Important
Visually inspect the tyres at regular intervals for detecting cracks and cuts, especially on the side walls, bulges or large spots that are indicative of internal damage. Replace them if badly damaged. Remove any stones or other foreign bodies caught in the tread.

Warning
Engine, exhaust pipes and silencers stay hot long after the engine is switched off; pay particular attention not to touch the exhaust system with any body part and do not park the vehicle next to flammable material (wood, leaves etc.).

Warning
Always remove the key when you leave your motorcycle unattended and make sure it is not accessible to persons not authorised to use the motorcycle.

Refuelling

Refuel outdoors with the engine turned off.
Do not smoke or use open flames when refuelling.
Be extremely careful not to spill fuel on the engine or on the exhaust pipe.
Never fill the tank completely. Fuel should never be touching the rim of filler recess.
While refuelling, avoid inhaling fuel vapours and avoid contact with eyes, skin or clothing.

Warning

The motorcycle is only compatible with fuel having a maximum content of ethanol of 10% (E10). Using fuel with ethanol content over 10% is forbidden. Using it could result in severe damage of the engine and motorcycle components. Using fuel with ethanol content over 10% will make the warranty null and void.

Warning

In case of indisposition caused by breathing fuel vapours for a long time, stay in the open air and contact your doctor. In case of contact with eyes, thoroughly flush with water; in case of contact with skin, immediately clean with water and soap.

Warning

Fuel is highly flammable, in case of accidental spillage of fuel on your clothes it is necessary to change into clean clothes.

Carrying the maximum load allowed

Your motorcycle is designed for long-distance riding, carrying the maximum load allowed in full safety. Even weight distribution is critical to preserving these safety features and avoiding trouble when performing sudden manoeuvres or riding on bumpy roads.

Warning

Do not exceed the total permitted weight for the motorcycle and pay attention to information provided below regarding load capacity.

Information about carrying capacity

Important

Arrange your luggage or heavy accessories in the lowest possible position and close to motorcycle centre.

Important

Never fix bulky or heavy objects to the handlebar or to the front mudguard as this would affect stability and cause danger.

Important

Be sure to secure the luggage to the supports provided on the motorcycle as firmly as possible. Improperly secured luggage may affect stability.

Important

Do not insert any objects you may need to carry into the gaps of the frame as these may foul moving parts.

Warning

Make sure the tyres are inflated to the proper pressure and that they are in good condition.

Refer to paragraph "Tyres" on page 220.

Dangerous products - warnings

Used engine oil

Warning
Prolonged or repeated contact with used engine oil may cause skin cancer. If working with engine oil on a daily basis, we recommend washing your hands thoroughly with soap immediately afterwards. Keep away from children.

Brake dust

Never clean the brake assembly using compressed air or a dry brush.

Brake fluid

Warning
Spilling brake fluid onto plastic, rubber or painted parts of the motorcycle may cause damages. Protect these parts with a clean shop cloth before proceeding to service the system. Keep away from children.

Warning
The fluid used in the brake system is corrosive. In the event of accidental contact with eyes or skin, wash the affected area with abundant running water.

Coolant

Engine coolant contains ethylene glycol, which may ignite under particular conditions, producing invisible flames. Although the flames from burning ethylene glycol are not visible, they are still capable of causing severe burns.

Warning
Take care not to spill engine coolant on the exhaust system or engine parts.

The cooling fan operates automatically: keep hands well clear and make sure your clothing does not snag on the fan.

Battery

Warning

The battery gives off explosive gases; never cause sparks or allow naked flames and cigarettes near the battery. When charging the battery, ensure that the working area is properly ventilated.

Vehicle identification number

Note

These numbers identify the motorcycle model and should always be indicated when ordering spare parts.

It is recommended to record the frame number of your motorcycle in the space below.

Frame number

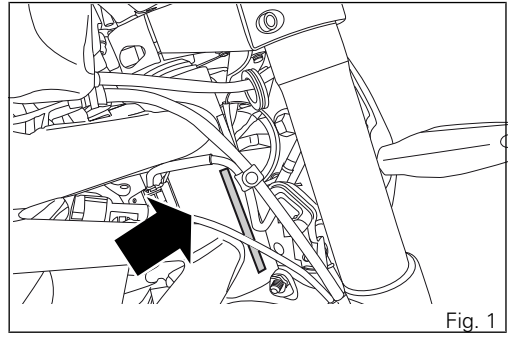

Fig. 1

Engine identification number

Note

These numbers identify the motorcycle model and should always be indicated when ordering spare parts.

It is recommended to record the number of your motorcycle's engine in the space below.

Engine number

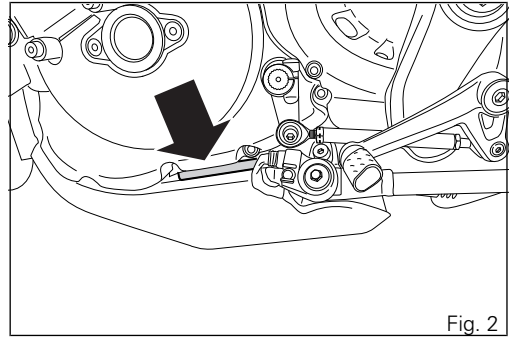

Fig. 2

Instrument panel (Dashboard)

Display settings and functions

1) Display.
2) NEUTRAL LIGHT N (GREEN).
Comes on when in neutral position.
3) HIGH BEAM LIGHT (BLUE).
It turns on to indicate that the high beam lights are on and when the flasher is activated.
4) ENGINE OIL PRESSURE LIGHT (RED).
Comes on when engine oil pressure is too low. It must turn on at "KEY-ON", but must turn OFF a few seconds after the engine has started. It may shortly come on when the engine is hot, however, it should go out as the engine revs up.

Important

If the ENGINE OIL light stays ON, stop the engine or it may suffer severe damage.

5) FUEL WARNING LIGHT (AMBER YELLOW).
Comes on when fuel is low and there are about 2.5 litres of fuel left in the tank.
6) TURN INDICATOR LIGHTS (GREEN).
A warning light turns on and blinks when the relevant turn indicator is active; when the warning lights blink at the same time, the HAZARD function is active.
7) "ENGINE/VEHICLE DIAGNOSIS - EOBD" LIGHT (AMBER YELLOW).
It turns on in the case of "engine" and/or "vehicle" errors and in some cases will lock the engine.
8) GENERAL WARNING LIGHTS (RED).
the lights (8a) turn on when RPM value reaches the first threshold before the rpm limiter kicks in;
the lights (8b) turn on when RPM value reaches the second threshold before the rpm limiter kicks in;

9) ABS LIGHTS (ABS) (AMBER YELLOW).
This turns on to indicate that ABS is disabled or not functioning.

Engine OFF / speed below 5 Km/h		
Light OFF	**Light flashing**	**Light steady on**
-	ABS disabled with the menu function "ABS"	ABS enabled, but not functioning yet
Engine on / speed below 5 Km/h		
Light OFF	**Light flashing**	**Light steady on**
-	ABS disabled with the menu function "ABS"	ABS enabled, but not functioning yet
Engine on / speed above 5 km/h		
Light OFF	**Light flashing**	**Light steady on**
ABS enabled and functioning	ABS disabled with the menu function "ABS"	ABS disabled and not functioning due to a problem

10) DTC INTERVENTION (AMBER YELLOW).

	DTC
No intervention	Light OFF
Spark advance cut	Light steady ON
Injection cut	Light steady ON

11) OVER REV / IMMOBILIZER / ANTI-THEFT SYSTEM (RED)

	Over rev
No intervention	Light OFF
Limiter	Light ON flashing

Note

Each calibration of the Engine Control Unit may have a different setting for the thresholds that precede the rev limiter and the rev limiter itself.

	Immobilizer
Key-ON status	Light OFF
Key-OFF status	Light ON flashing
Key-OFF status for over 12 hours	Light OFF

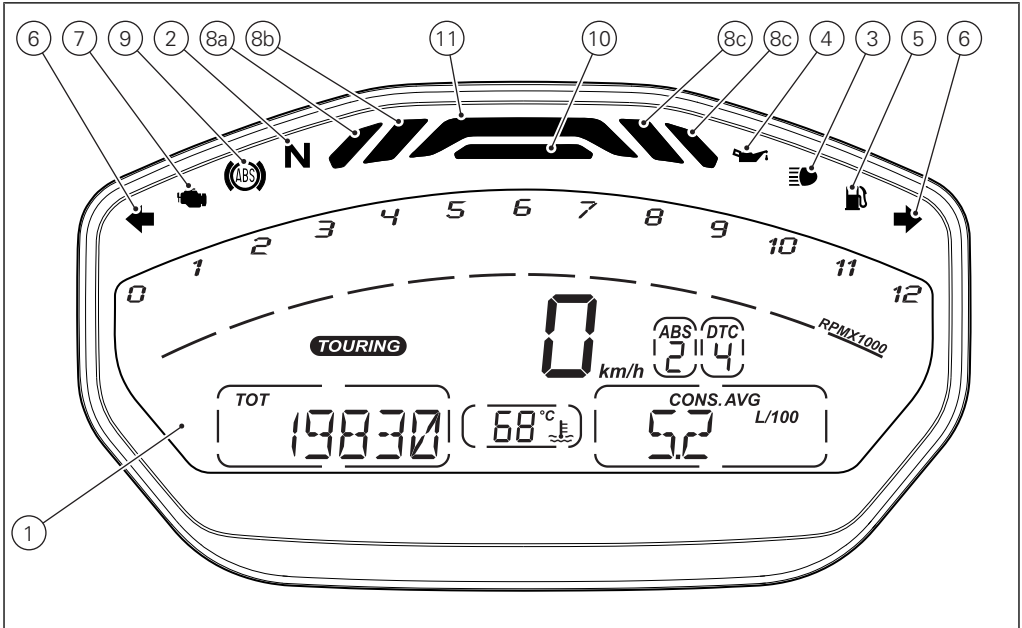
6
7
9
2
8a
8b
11
10
8c
8c
4
3
5
6
N
ABS
0
1
2
3
4
5
6
7
8
9
10
11
12
RPMX1000
TOURING
0
km/h
ABS
DTC
2
4
TOT
19830
68 °C
CONS. AVG
L/100
5.2
1

Fig. 3

Acronyms and abbreviations used in the Manual

ABS
Antilock Braking System
BBS
Black Box System
CAN
Controller Area Network
DDA
DUCATI Data Acquisition
DSB
Dashboard
DTC
DUCATI Traction Control
ECU
Engine Control Unit

Technological Dictionary

Riding Mode

The rider can choose from 3 different preset bike configurations (Riding Modes) and pick the one that best suits his/her riding style or ground conditions. The Riding Modes allow the user to instantly change the engine power delivery (Power Mode) and the ABS and DTC settings.

Available Riding Modes: Sport, Touring and Urban. Within every Riding Mode, the rider can customise any settings.

Power Mode

The Power Modes are the different engine maps the rider can select to change power level and delivery to suit his/her own riding style and surface conditions. There are three Power Modes, one for each Riding Mode:

- LOW, with 'soft' power delivery;
- MED, with 'soft' power delivery;
- HIGH, with 'instant' power delivery.

Ride by Wire (RbW)

The Ride by Wire system is the electronic device that controls throttle opening and closing. Since there is no mechanical connection between the throttle twistgrip and the throttle bodies, the ECU can adjust power delivery by directly affecting throttle opening angle.
The Ride by Wire system allows you to obtain different power level and delivery according to the selected Riding Mode (Power Mode), but even to

accurately control the engine brake (EBC), thereby helping to control the rear wheel slipping (DTC).

Ducati Traction Control (DTC)

The Ducati Traction Control system (DTC) supervises the rear wheel slipping control and settings vary through eight different levels that are programmed to offer a different tolerance level to rear wheel slipping. Each Riding Mode features a pre-set intervention level.
Level eight indicates system intervention whenever a slight slipping is detected, while level one is for very expert riders because it is less sensitive to slipping and intervention is hence softer.

Anti-lock Braking System (ABS) 9ME

ABS 9ME system is a two-channel latest-generation system that actuates combined braking with anti lift-up function for the rear wheel so as to guarantee not only a reduced stopping distance, but also a higher stability under braking.
The system features 3 levels, one associated to each Riding Mode.

Function push-buttons

1) UP CONTROL SWITCH " ▲ "
Button used to display and set instrument panel parameters with the position " ▲ ".
2) DOWN CONTROL SWITCH " ▼ "
Button used to display and set instrument panel parameters with the position " ▼ ".
3) HIGH-BEAM FLASH BUTTON (FLASH)
The high-beam flash button may also be used for LAP functions.
4) TURN INDICATORS CANCEL BUTTON
The turn indicators cancel button may also be used for the CONFIRM MENU function, for selecting the riding style. Press this button for 3 seconds to the left side to activate the "Hazard" function (all 4 turn indicators).

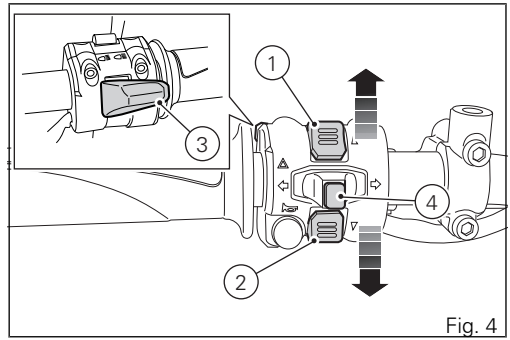

Fig. 4

Parameter setting/displaying

Upon key-on, the instrument panel:

- turns on the display backlighting;
- activates the rev counter which increases from 0 to 11000 and decreases back to 0;
- activates the vehicle speed digits and shows a counting from 0 to 300 and then back to 0;
- turns on the warning lights from the outer to the inner ones.

At the end of the check, the instrument panel displays the main screen ("standard screen") showing the available functions and turns on the warning lights, if necessary.

During this first check stage, if the motorcycle speed exceeds 10 km/h (actual speed), the instrument panel will stop:

- the display check routine and display the standard screen containing updated information;
- the warning light check routine and leave ON only the warning lights that are actually active at the moment.

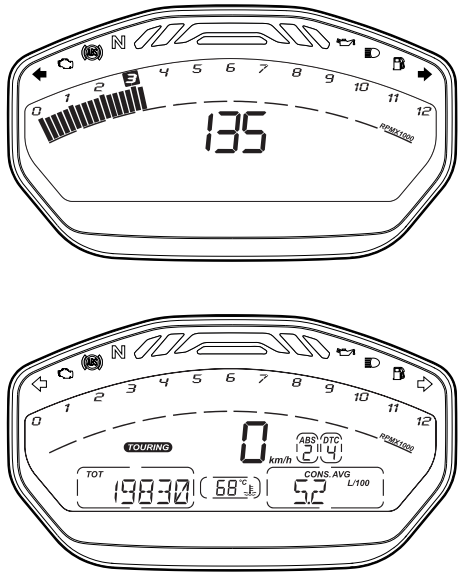

Fig. 5

Data displayed on the main screen are as follows:

1) Rpm bargraph.
2) Motorcycle speed.
3) MENU 1 (Odometer, Trip A, Trip B, Trip Fuel, Trip Time, Clock, Lap time - only if active).
4) MENU 2 (Average fuel consumption, Instant fuel consumption, Average speed, Ambient air temperature).
5) Engine coolant temperature.
6) Set Riding Mode.
7) DTC level indication (ON) or DTC OFF indication.
8) ABS ON/OFF indication.
9) "LAP ON" indication (if fitted).
10) SERVICE indication (only if active).
11) Error presence indication (only if at least one error is present).

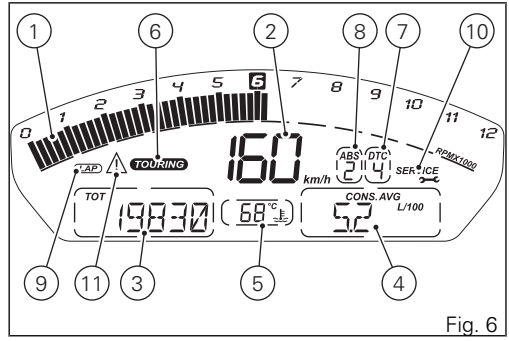

Fig. 6

From the main screen, press button (1) on LH switch to view Menu 1 information.

- Odometer (TOT);
- TRIP A;
- TRIP B;
- TRIP FUEL (when function is active);
- TRIP TIME;
- Clock.

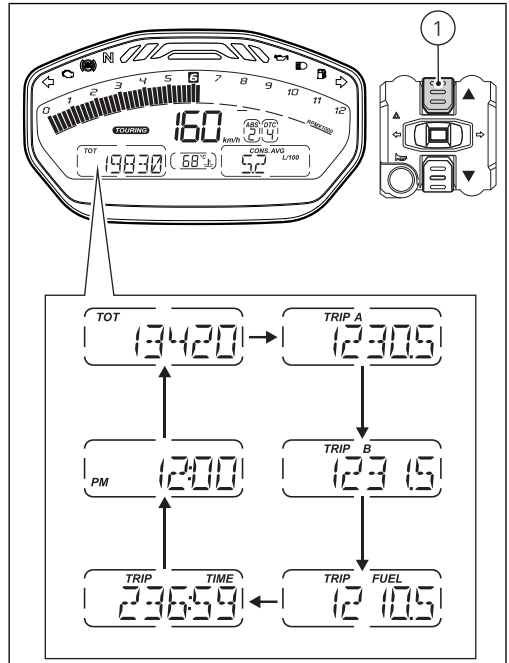

Fig. 7

From the main screen, press button (2) on LH switch to view Menu 2 information.

- Average fuel consumption (CONS. AVG);
- Instant fuel consumption (CONS.);
- Average speed (SPEED AVG);
- Air temperature (T-AIR).

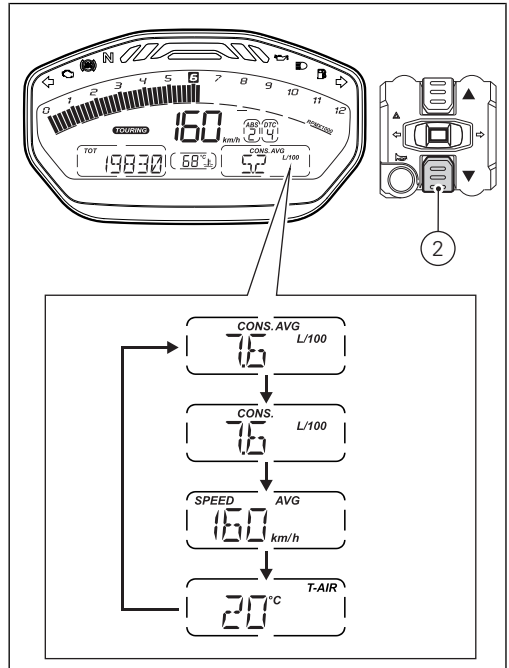

Fig. 8

The instrument panel stores Menu 1 and Menu 2 settings in use upon KEY-OFF. On the following KEY-ON, previously stored Menu 1 e Menu 2 pages are displayed.
In case of sudden and unexpected power OFF, the instrument panel displays the default settings for Menu 1 and Menu 2 upon the following KEY-ON; in particular:

- Menu 1 default page = Odometer (TOT);
- Menu 2 default page = Average fuel consumption (CONS.AVG).

Upon KEY-ON, for every display layout, instrument panel shows for 10 seconds in Menu 1 the "Odometer" page and then shows the page saved upon previous KEY-OFF.

When the standard screen of set layout is displayed, hold the button (2) for 3 seconds, when actual motorcycle speed is <= (lower than or equal to) 20 km/h, to enter the Setting menu, where you can set any function.

Important

You can enter the SETTING MENU only if vehicle actual speed is <= (lower than or equal to) 20 km/h. Within the SETTING MENU, if vehicle actual speed exceeds 20 km/h, the instrument panel automatically quits the menu and shows the standard screen.

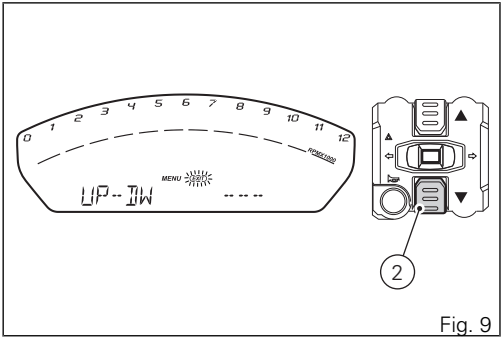

Fig. 9

If upon key-on and at the end of the check an Immobilizer ERROR occurs, the instrument panel automatically activates in MENU 1 the possibility to enter the four-digit PIN CODE previously memorised with the PIN function in the Setting Menu.

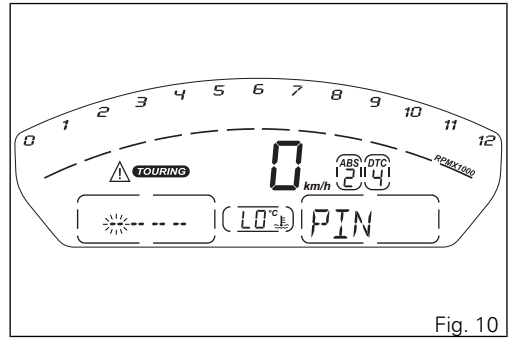

Fig. 10

Main functions

The functions displayed in the Standard screen are the following:

Main information

- Motorcycle speed
- Engine rpm indication (RPM)
- Riding Mode
- ABS
- DTC
- Engine Coolant temperature
- Menu 1 displays the following functions:
  - Odometer (TOT)
  - Trip meter A (TRIP A)
  - Trip meter B (TRIP B)
  - Partial fuel reserve counter (TRIP FUEL)
  - Trip time (TRIP TIME)
  - Clock
  - LAP time (only if active)
- Menu 2 displays the following functions:
  - Average Fuel Consumption (CONS. AVG)
  - Instantaneous fuel consumption (CONS.)
  - Average speed (SPEED AVG)
  - Ambient air temperature (AIR)

Additional information

- Service indication (SERVICE)
- ERROR indication
- LAP

The functions within the Setting Menu that can be modified by the user are the following:

- Riding mode customisation (RIDING MODE): this menu allows customisation of:
  - ABS setting (ABS)
  - DTC level setting (DTC)
  - Engine setting (ENGINE)
  - Restoring the default settings of all Riding Modes (ALL DEFAULT)
  - Restoring the default settings of a single Riding Mode (DEFAULT)
- Battery voltage (BATTERY)
- Backlighting regulation (BACK LIGHT)
- LAP (LAP time activation and displaying)
- Clock setting (CLOCK)
- PIN (enter/change PIN CODE)
- Engine rpm indication (RPM)
- Unit setting (Speed - Temperature - Fuel consumption) UNT
- ERRORS (error indication — active only if one or more errors are active)

Motorcycle speed

This function allows displaying the vehicle speed (km/h or mph according to the specific application).
The instrument panel receives information about the actual motorcycle speed (calculated in km/h) and displays the value increased by 5% and converted in the set unit of measurement (km/h or mph).
The max. displayed speed is 299 km/h (186 mph).

A string of dashes "- - -" is displayed with the set unit of measurement if:

- speed is higher than 299 km/h or 186 mph or if instrument panel is not receiving the speed value ("- - -" steady ON);
- the rear speed sensor is in fault (flashing "- - -").

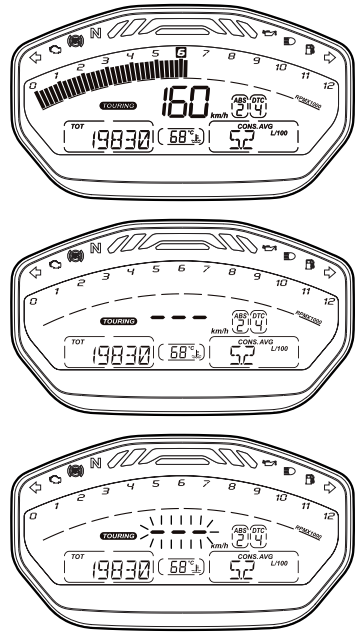

Fig. 11

Engine rpm indication (RPM)

This function allows displaying engine rpm. Instrument panel receives rpm value and displays it. The information is displayed by the bargraph filling from the left to the right according to the engine rpm and with the negative display (switching OFF of the digit and switching on of its rectangle) of the numerical digit of the relevant miles.

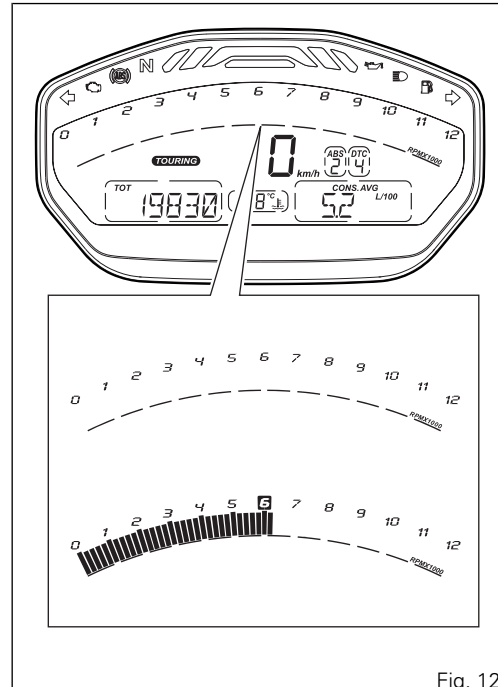

Fig. 12

The thresholds before the rpm limiter are:

1st threshold 9900 rpm (A).

2nd threshold 10100 rpm (B).

When the rev limiter value (C) is reached, the warning lights start flashing.

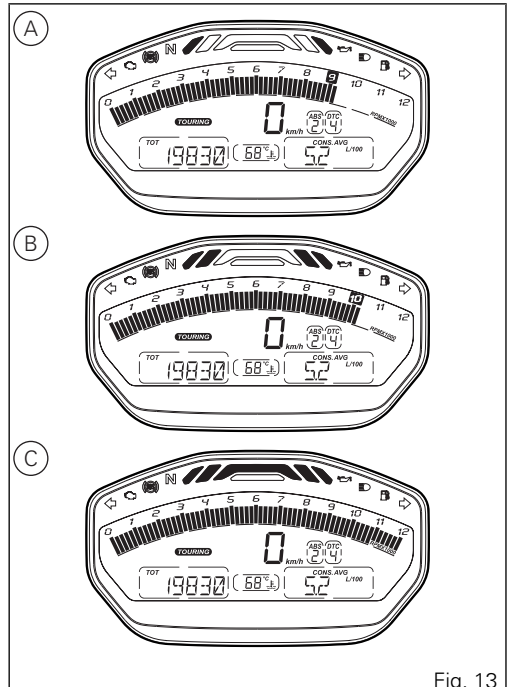

Fig. 13

Riding Mode

This function indicates the "Riding mode" set in the vehicle; each riding mode can be changed using the "Setting Riding Mode" function.
It is possible to set three different riding modes: SPORT, TOURING and URBAN.
Every Riding Mode contains the following parameters, set by Ducati or customised by the user through the setting function pages:

- a specific level of intervention for the DTC traction control (1, 2, 3, 4, 5, 6, 7, 8, OFF);
- a specific engine power that will change the engine power;
- a specific ABS calibration (1, 2, 3, OFF).

Warning

Ducati recommends changing the Riding mode when the motorcycle is stopped. If the riding mode is changed while riding, be very careful (it is recommended to change the Riding mode at a low speed).

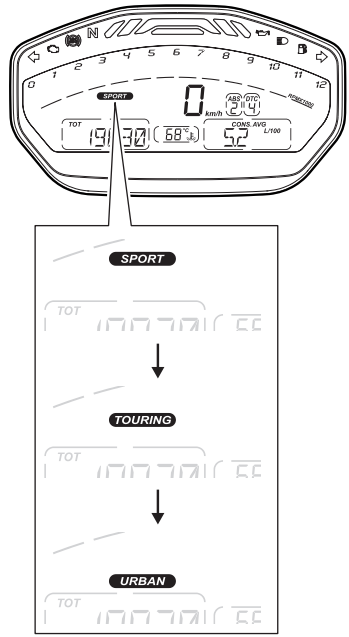

Fig. 14

Riding mode change function

This function allows changing vehicle riding mode.
Press the CONFIRM MENU button (4) to change the riding mode.
The display shows the three riding modes (SPORT, TOURING and URBAN).
Each time you press button (4), the instrument panel makes a Riding Mode name flash and shifts the arrow to the right side of the name to indicate the selected Riding Mode.
After selecting the desired riding mode, confirm it by keeping the CONFIRM MENU (4) button pressed for two seconds.

Warning

It is not possible to open the menu for selecting the riding mode, if button (4) is in the position for activating the turn indicators (to the left or right)

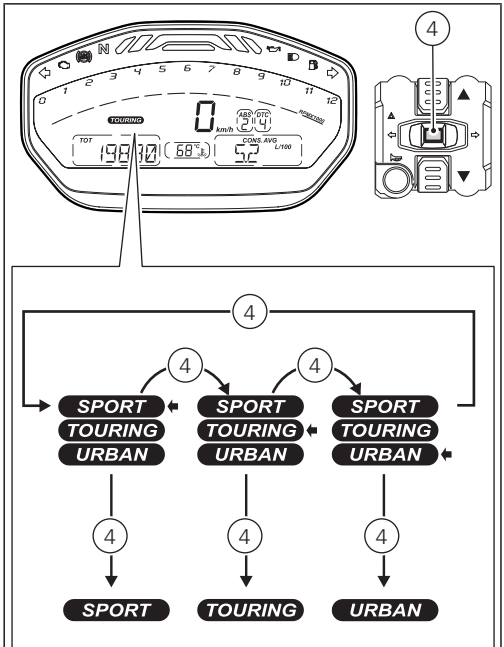

Fig. 15

Once the desired riding mode is highlighted, if the CONFIRM MENU button (4) is not pressed within 10 seconds, the new riding mode selection is not stored and the standard screen is displayed.

When system requests rider to confirm the riding mode change, the procedure will output an error if:

- the throttle twistgrip is open, brakes are activated and the motorcycle is not still; in this case "CLOSE GAS" and "DON'T BRK" warnings flash on the display in MENU 1 and MENU 2, by alternating each writing every second.
  If within 5 seconds the throttle is not closed, the brakes are not released or the motorcycle is not stopped (zero speed), the procedure for changing riding mode will not be completed and the Standard screen is displayed.

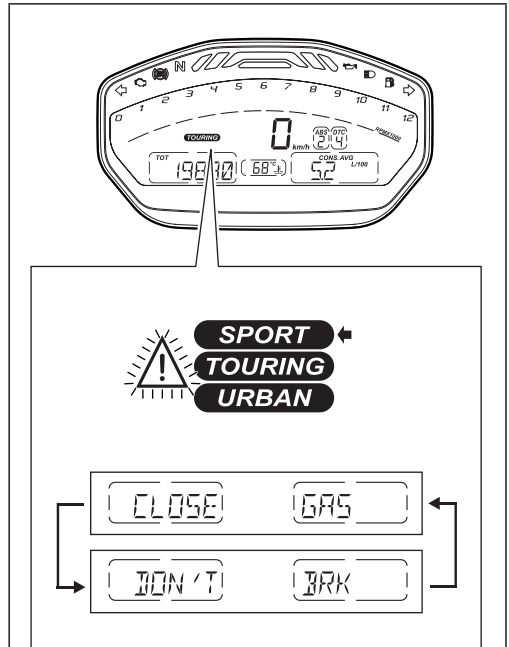

Fig. 16

Note

If the change of riding mode is associated with the ABS change of state from "ON" to "OFF" or vice-versa, the instrument panel also starts the procedure for disabling or activating the ABS, respectively, upon confirmation of the selected riding mode.

Note

If at least one error is present upon Riding Mode change, priority is given to messages "CLOSE GAS" and "DON'T BRK", and the relevant Warning symbol will flash.

ABS

The motorcycle is equipped with ABS, the instrument panel displays the rectangle with ABS status.
The instrument panel displays:

- if the ABS is active, the message "ABS" and the rectangle with the set intervention level number (1 to 3);
- if the ABS is not active, the message "ABS" and the rectangle with the steady symbol "- -";
- if the ABS is in fault, the message "ABS" and the rectangle with the flashing symbol "- -"; the EOBD warning light turns on together with the Warning symbol and the corresponding error is displayed.

If the instrument panel does not receive information, the ABS warning light turns on.

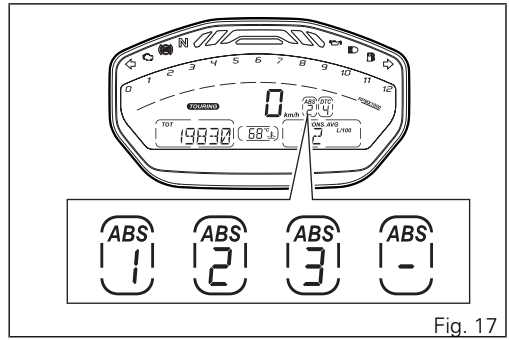

Fig. 17

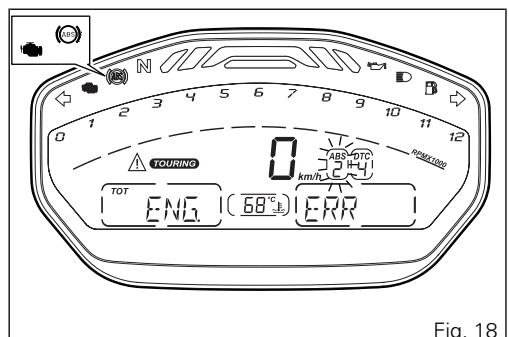

Fig. 18

The following table indicates the most suitable level of ABS intervention for the various riding types as well as the default settings in the "Riding Mode" that can be selected by the rider:

ABS	RIDING MODE	CHARACTERISTIC	DEFAULT
OFF		The ABS is disabled	NO
1	TRACK/SPORT	Typical use conditions: road or track use, in excellent grip conditions. The ABS in this mode controls both wheels, but NO anti lift-up* control is active. This calibration focuses on braking power.	It is the default level for the "SPORT" Riding Mode
2	SPORT/TOURING	Typical use conditions: road use, in excellent grip conditions. The ABS in this mode controls both wheels and anti lift-up* controls are active. This calibration focusses on braking power and yet keeps good stability under braking and lift-up* control.	It is the default level for the "TOURING" Riding Mode
3	ALL/URBAN/WET CONDITION	Typical use conditions: any riding condition. The ABS in this mode controls both wheels and anti lift-up* controls are active. This calibration focusses on maximum vehicle stability and lift-up* prevention, yet keeping good maximum deceleration performance.	It is the default level for the "URBAN" Riding Mode

* rear wheel lifting up upon maximum deceleration

Tips on how to select the sensitivity level

Warning

The levels of the ABS system your motorcycle is equipped with were calibrated with original equipment tyres.
The use of tyres of different size and characteristics to the original tyres may alter the operating characteristics of the system thus making it unsafe. It is recommended not to install tyres of different size than the ones approved for your vehicle.

Motorcycle original equipment: (front 120/70ZR17 - rear 180/60ZR17).

- Pirelli Diablo Rosso II;

In the case of minor differences, such as for example, tyres of a different make and/or model than the OE ones, but with the same size (front 120/70ZR17 - rear 180/60ZR17), it may be sufficient to simply select the suitable level setting from those available in order to restore optimal system operation.
If tyres of a different size class are used or if the tyre size differs significantly from the original tyres, it may be that the system operation is affected to the point where none of the 3 available level settings will give satisfactory results. In this case it is advisable to deactivate the traction control system.
Selecting level 3, the ABS will intervene to ensure a very stable braking, good lift-up control, the motorcycle keeps a good alignment during the whole braking. Settings between level 3 and level 1 privilege more and more the braking power rather than stability and lift-up control; level 1 provides no lift-up control.

The choice of the correct level mainly depends on the following parameters:

1) The tyre/asphalt grip (type of tyre, amount of tyre wear, the road/track surface, weather conditions, etc.).
2) The rider's experience and sensitivity: expert riders can tackle a lift-up in trying to reduce the stopping distance to a minimum, while less expert riders are recommended to use settings 2 and 3, that will help them keeping the motorcycle more stable even in emergency braking.

DTC

The instrument panel displays DTC status as follows:

- if DTC is active, the "DTC" and the rectangle with the Traction Control intervention level number (1 to 8);
- if DTC is not active, the message "DTC" and the rectangle with the steady symbol "- -";
- If the DTC or the Black Box control unit feature an error, the message "DTC" and the rectangle with the flashing symbol "- -".

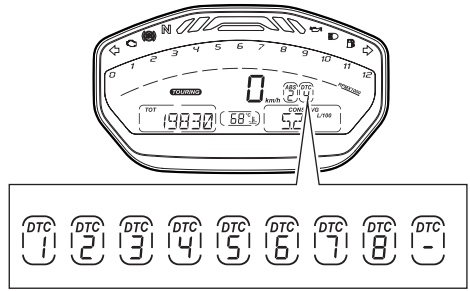

Fig. 19

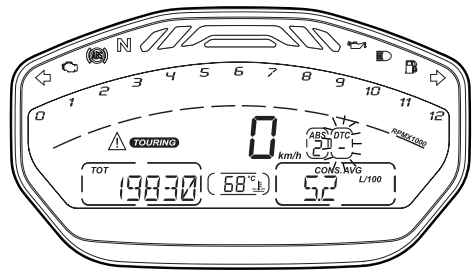

Fig. 20

Warning

DTC is a rider aid that can be used both on the track and the road. The system is designed to make riding easier and to enhance safety, but in no way relieves the rider of the obligation to drive responsibly and to maintain a high standard of riding in order to avoid accidents, whether caused by his own errors or those of other road users, through making emergency manoeuvres, in accordance with the prescriptions of the road traffic code.

The rider must always be aware that active safety systems have a preventive function. The active elements help the rider control the motorcycle, making it as easy and safe to ride as possible. The presence of an active safety system should not encourage the rider to ride at speeds beyond the reasonable limits, not in accordance with the road conditions, the laws of physics, good riding standards and the requirements of the road traffic code.

The following table indicates the most suitable level of DTC intervention for the various riding modes as well as the default settings in the "Riding Modes" that can be selected by the rider.

DTC	RIDING MODE	USE	DEFAULT
1	TRACK	Track use for expert riders. System permits sliding sideways.	NO
2	SPORT	Sport style on the road and on the track, for experienced riders. System permits sliding sideways.	It is the default level for the "SPORT" Riding Mode
3	SPORT	Sport road style for experienced riders. System permits sliding sideways.	NO
4	TOURING	Fast touring style.	It is the default level for the "TOURING" Riding Mode
5	TOURING	Touring style.	NO
6	URBAN	"Very safe" style on any kind of path.	It is the default level for the "URBAN" Riding Mode
7	RAIN	For riding on slightly wet or moist road. Compatible with ENGINE LOW setting.	NO
8	HEAVY RAIN	For riding on wet road. Compatible with ENGINE LOW setting.	NO

Tips on how to select the sensitivity level

Warning

The 8 levels of the DTC system your motorcycle is equipped with were calibrated with original equipment tyres (make, model and size). The use of tyres of different size to the original tyres may alter the operating characteristics of the system.

Motorcycle original equipment: (front 120/70ZR17 - rear 180/60ZR17).

- Pirelli Diablo Rosso II.

In the case of minor differences, such as for example, tyres of a different make and/or model than the OE ones, but with the same size (front 120/70ZR17 - rear 180/60ZR17), it may be sufficient to simply select the suitable level setting from those available in order to restore optimal system operation.
If tyres of a different size class are used or if the tyre size differs significantly from the original tyres, it may be that the system operation is affected to the point where none of the 8 available level settings will give satisfactory results.
In this case it is advisable to deactivate the traction control system.
If level 8 is selected, the DTC system will kick in at the slightest hint that the rear wheel is starting to spin.
Between level 8 and level 1 there are other intermediate levels. DTC intervention decreases from level 8 to level 1.
Levels 1, 2 and 3 allow both spinning and skidding of the rear wheel out of a corner: these levels are recommended only for expert riders, in particular level 1 is designed for track use.
The choice of the correct level mainly depends on the following parameters:

1) The tyre/asphalt grip (type of tyre, amount of tyre wear, the road/track surface, weather conditions, etc.);
2) The characteristics of the path/circuit (bends all taken at similar speeds or at very different speeds):
3) The riding mode (whether the rider has a "smooth" or a "rough" style).

Level depends on grip conditions: the choice of level setting depends greatly on the grip conditions of the

track/circuit (see below, tips for use on the track and on the road). Level depends on type of track: if the track/path features bends all taken at similar speeds, it will be easier to find a level suitable for all bends; while a track/path with bends all requiring different speeds will require a DTC level setting that is the best compromise for all bends.
Level depends on riding style: The DTC will tend to kick in more with a "smooth" riding style, where the motorcycle is leaned over further, rather than with a "rough" style, where the motorcycle is straightened up as quickly as possible when exiting a turn.

Tips for use on the track

We recommend that level 6 is used for a couple of full laps (to allow the tyres to warm up) in order to get used to the system. Then try levels 5, 4, etc., in succession until you identify the DTC sensitivity level that suits you best (always try each level for at least two laps to allow the tyres to warm up).
Once you have found a satisfactory setting for all the corners except one or two slow ones, where the system tends to kick in and control too much, you can try to modify your riding style slightly to a more "rough" approach to cornering i.e. straighten up more rapidly on exiting the corner, instead of immediately trying a different level setting.

Tips for use on dry road

Activate the DTC, select level 6 and ride the motorcycle in your usual style; if the level of DTC sensitivity seems excessive, try levels 5, 4, etc., until you find the one that suits you best.
If changes occur in the grip conditions and/or circuit characteristics and/or your riding style, and the level setting is no longer suitable, switch to the next level up or down and proceed to determine the best setting (e.g. if with level 5 the DTC intervention seems excessive, switch to level 4; alternatively, if on level 5 you cannot perceive any DTC intervention, switch to level 6).

Tips for use on wet road

Level 7 is recommended when road is slightly wet or damp and level 8 on wet road. It is also recommended to select ENGINE LOW in these conditions.

Engine coolant temperature

The instrument panel receives information about the engine temperature (already calculated in °C) and displays the value in the set unit of measurement (°C or °F), followed by the unit of measurement and the engine temperature symbol.
The temperature display range goes from 40 °C to +120 °C.
If reading is:

- <= (lower than or equal to) -40 °C, a string of flashing dashes " - - - " is displayed;
- within the range -39 °C to +39 °C, "LO" is displayed steadily;
- within the range +40 °C to +120 °C, the value is displayed steadily;
- >= (higher than or equal to) +121 °C, "HI" is displayed flashing.

If the coolant temperature sensor is in fault, a string of flashing dashes "- - -" is displayed with the set unit of measurement and the EOBD light turns on.
If the instrument panel is not receiving coolant temperature value, a string of steady dashes "- - -" is displayed, followed by the unit of measurement.

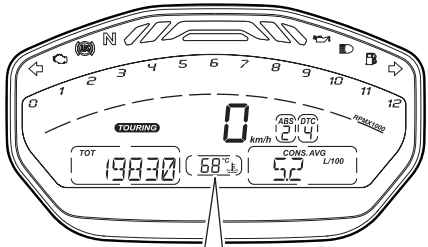
N
0 1 2 3 4 5 6 7 8 9 10 11 12
TOURING
0
km/h
ABS
DTC
RPMX1000
TOT
19830
68 °C
CONS.AVG
L/100
5.2

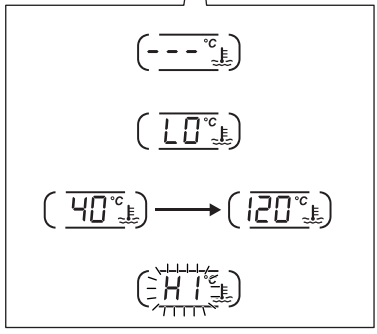
- - - °C
LO °C
40 °C
120 °C
HI °C

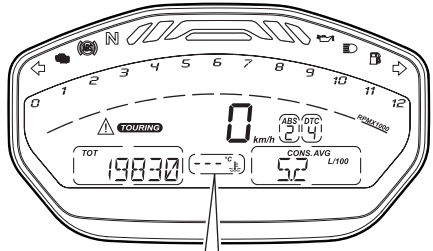
N
0 1 2 3 4 5 6 7 8 9 10 11 12
TOURING
0
km/h
ABS
DTC
RPMX1000
TOT
19830
- - - °C
CONS.AVG
L/100
5.2

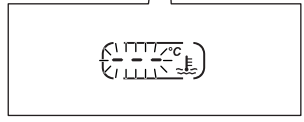
- - - - °C

Fig. 21

Menu 1 functions

MENU 1 functions are:

- Odometer (TOT);
- Trip meter A (TRIP A);
- Trip meter A (TRIP B);
- Partial fuel reserve counter (TRIP FUEL);
- Trip time (TRIP TIME);
- Clock.

By pressing button (1) it is possible to view the functions of MENU 1.

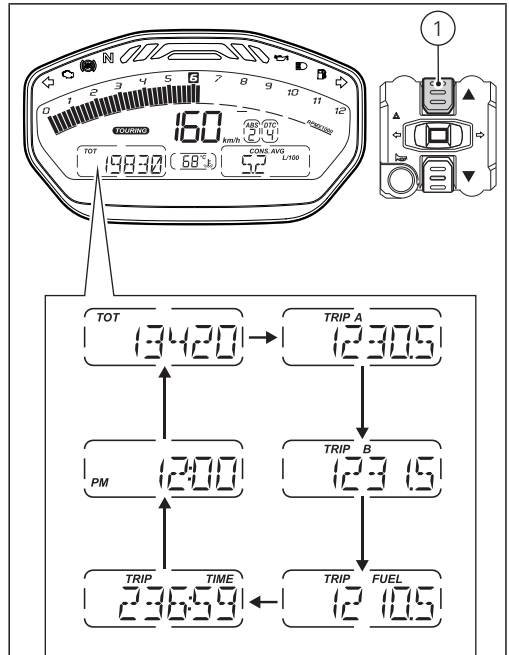

Fig. 22

Odometer (TOT)

The odometer counts and displays the total distance covered by the motorcycle with the set unit of measurement (km or mi).
The odometer number (in km or miles) is displayed with the message "TOT" and the indication of the unit of measurement. When the maximum value is reached (199999 km or 199999 mi) the instrument panel will permanently display said value.
The odometer value is saved permanently and cannot be reset under any circumstances.

The reading is not lost in case of a power OFF (Battery OFF).

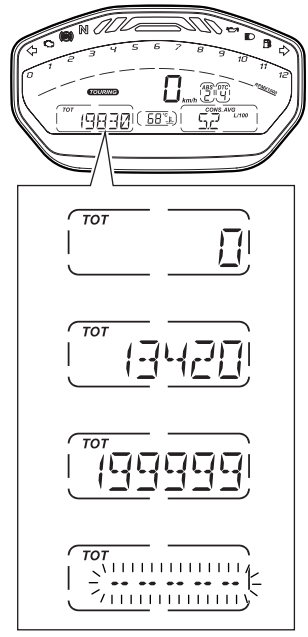

Fig. 23

Note

Upon Key-ON, the instrument panel always shows the Odometer indication for 10 seconds, then shows the user's settings page.

Note

If a string of flashing dashes " ----- " is displayed within odometer function, please contact a Ducati Dealer or Authorised Service Centre.

Trip meter 1 (TRIP A)

The trip meter counts and displays the partial distance covered by the motorcycle with the set unit of measurement (km or mi).
When the reading exceeds the maximum value of 9999.9 km or 9999.9 mi, distance travelled is reset and the meter automatically starts counting from 0 again.
While the trip meter is displayed, press button (1) for 3 seconds to reset TRIP A. When TRIP A is reset, the average fuel consumption, average speed and trip time data are reset as well.
The TRIP A counter is automatically reset in case the system unit of measurement is changed manually or if the power supply is interrupted (faulty battery): the counter will then start back from zero, considering the new units of measurement.

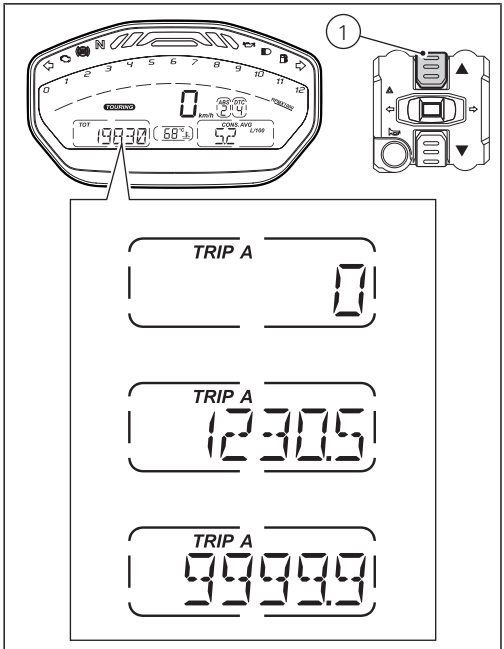

Fig. 24

Trip meter 2 (TRIP B)

The trip meter counts and displays the partial distance covered by the motorcycle with the set unit of measurement (km or mi).
When the reading exceeds the maximum value of 9999.9 km or 9999.9 mi, distance travelled is reset and the meter automatically starts counting from 0 again.
While the trip meter is displayed, press button (1) for 3 seconds to reset TRIP B.
The TRIP B counter is automatically reset in case the system unit of measurement is changed manually or if the power supply is interrupted (faulty battery): the counter will then start back from zero, considering the new units of measurement.

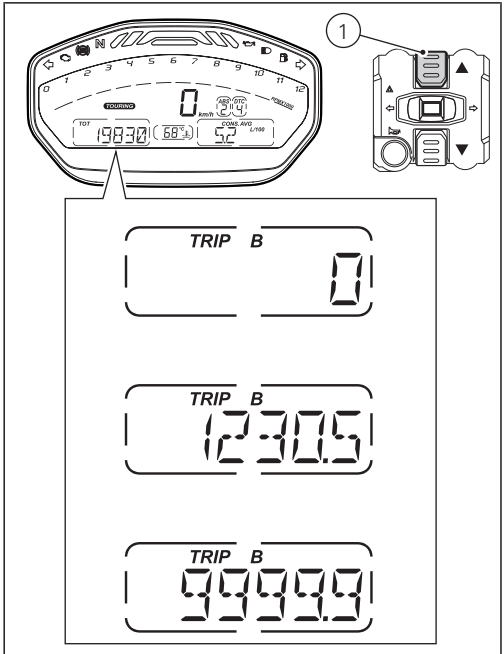

Fig. 25

Partial fuel reserve counter (TRIP FUEL)

The fuel trip meter counts and displays the distance covered by the motorcycle on reserve (since the low fuel light turns on) with the set unit of measurement (km or mi).

When the Low Fuel Light turns on, the display automatically shows the TRIP FUEL function, regardless of the currently displayed function; then, it is possible to toggle through the other Menu 1 functions.

Trip fuel reading remains stored even after Key-Off until the motorcycle is refuelled. Count is interrupted automatically as soon as fuel is topped up to above minimum level.

When the reading exceeds the maximum value of 9999.9 km or 9999.9 mi, distance travelled is reset and the meter automatically starts counting from 0 again.

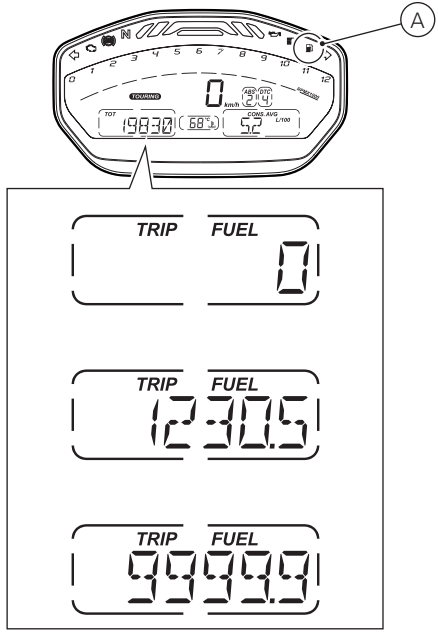

Fig. 26

Trip time

The instrument panel calculates and displays the trip time as hhh:mm followed by TRIP TIME. The calculation is made considering the time travelled since the last TRIP A reset. When TRIP A is reset, the value is set to zero. The time count active phase occurs when the engine is running and the motorcycle is stopped (the time is automatically stopped when the motorcycle is not moving and the engine is OFF and restarts when the counting active phase starts again).

When the reading exceeds 511:00 (511 hours and 00 minutes), the meter is reset and automatically starts counting from 0 again.

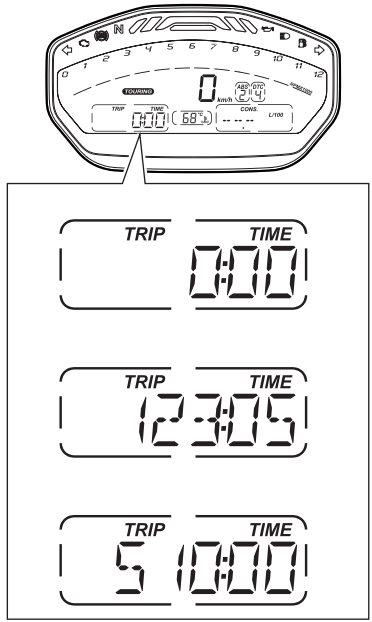

Fig. 27

Clock

The instrument panel receives information about the time to be displayed.
The instrument panel shows the time in the following format:

- hh (hours) : mm (minutes);
- with the message AM (for values ranging between 0:00 and 11:59), or PM (for values ranging between 12:00 and 12:59 and between 1:00 and 11:59).

In case of power supply interruption (faulty battery), the clock is reset and starts automatically from "0:00".

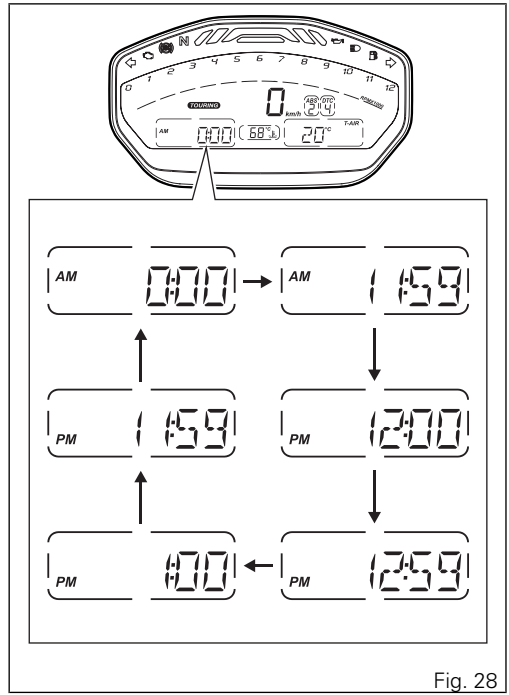

Fig. 28

Menu 2 functions

MENU 2 functions are:

- Average fuel consumption (CONS. AVG)
- Instantaneous fuel consumption (CONS.)
- Average speed (SPEED AVG)
- Ambient air temperature

By pressing button (2) it is possible to view the functions of MENU 2.

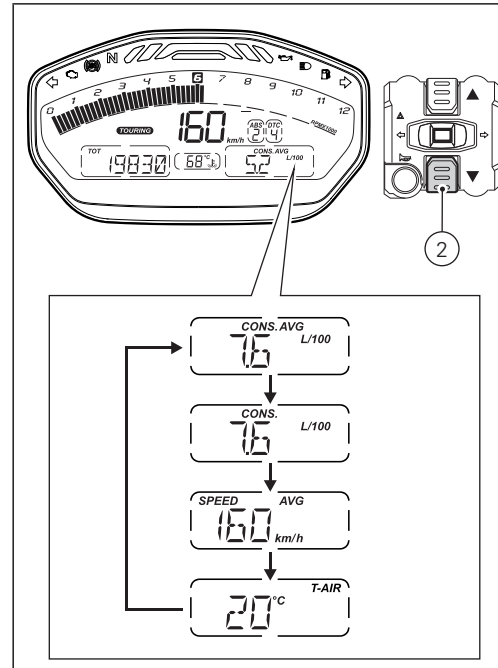

Fig. 29

Average fuel consumption

The instrument panel calculates and displays the motorcycle average fuel consumption, the set unit of measurement and CONS. AVG.
The calculation is made considering the quantity of fuel used and the distance travelled since TRIP A was last reset.
When TRIP A is reset, the value is reset and the first value available is displayed 10 seconds after the reset.
During the first 10 seconds, when the value is not yet available, the display will show a string of three dashes "- - . - " steadily as average fuel consumption.
Value is expressed in the set unit of measurement (litres / 100 km or mpg UK or mpg USA).
The active calculation phase occurs when the engine is running and the motorcycle is stopped (moments when the motorcycle is not moving and the engine is OFF are not considered).

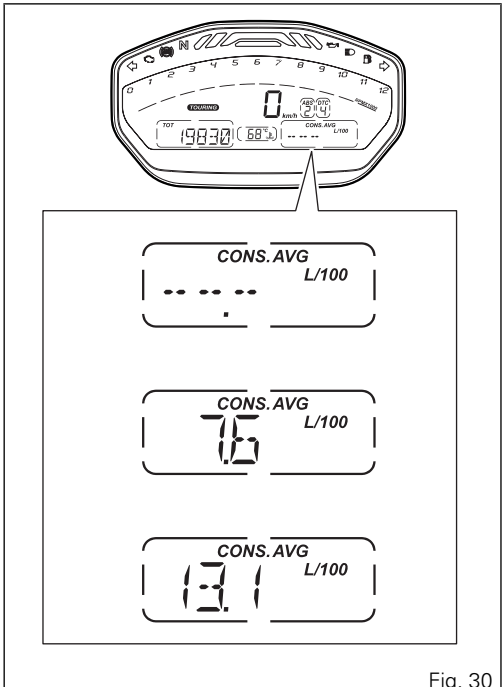

Fig. 30

Note

It is possible to change the units of measurement for "Consumption" (both average and instantaneous together) from L/100 to km/L through the Setting MENU, using the UNITS function.

Instantaneous fuel consumption

The instrument panel calculates and displays the motorcycle instantaneous fuel consumption, the set unit of measurement and CONS. text.
The calculation is made considering the quantity of fuel used and the distance travelled during the last second. Value is expressed in the set unit of measurement: litres / 100 km or mpg UK or mpg USA.
The active calculation phase only occurs when the engine is running and the motorcycle is moving (moments when the motorcycle is not moving when speed is equal to 0 and/or when the engine is OFF are not considered). When the calculation is not made, a string of three dashes is displayed " - - . - " steadily as instantaneous fuel consumption.

Note

It is possible to change the units of measurement for "Consumption" (both average and instantaneous together) from L/100 to km/L through the Setting MENU, using the UNITS function.

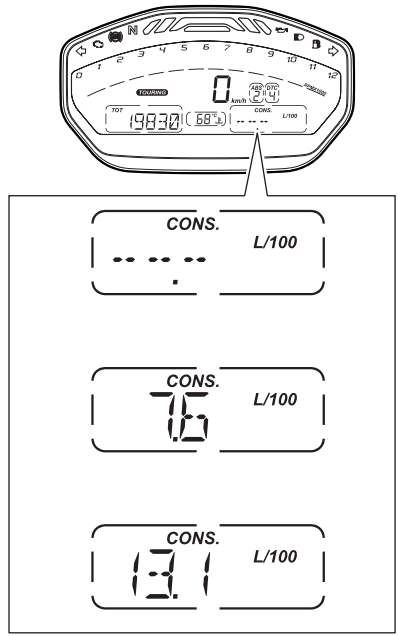

Fig. 31

Average speed

The instrument panel calculates and displays the motorcycle average speed, the set unit of measurement and SPEED AVG text.
The calculation considers the distance and time since Trip A was last reset.
When TRIP A is reset, the value is reset and the first value available is displayed 10 seconds after the reset.
During the first 10 seconds, when the value is not yet available, the display will show a string of three dashes " - - - " steadily as average speed.
The active calculation phase occurs when the engine is running even if the motorcycle is stopped (moments when the motorcycle is not moving and the engine is OFF are not considered).
The average speed value displayed is calculated by adding 5% so as to be consistent with motorcycle speed indication.

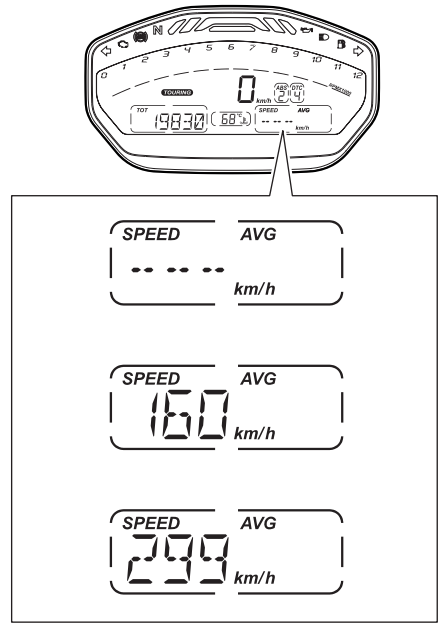

Fig. 32

Note

It is possible to change the units of measurement of "speed" (and "distance" travelled) from Km/h (and Km) to mph (and miles) through the Setting menu, using the "SET UNITS" Function.

Ambient air temperature

The instrument panel displays the ambient temperature in the set unit of measurement (°C or °F), followed by the set unit of measurement and the message T-AIR. The temperature value is displayed when ranging from -39 °C to +124 °C (or -38 °F ÷ +255 °F). For any different temperature (below -39 °C (-38 °F) or above +124 °C (+255 °F)) a string of three dashes " - - - " is steadily displayed, followed by the unit of measurement.
If the air temperature sensor is in fault, the instrument panel will show three flashing dashes " - - - " as air temperature value, followed by the unit of measurement and the EOBD light will turn on.

Note

When the motorcycle is stopped, the engine heat could influence the displayed temperature.

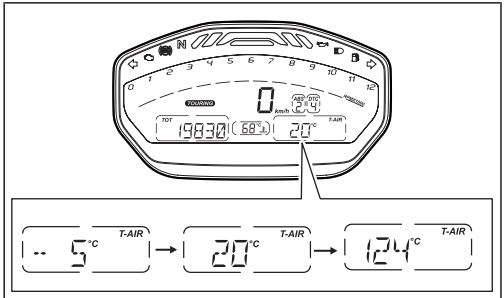

Fig. 33

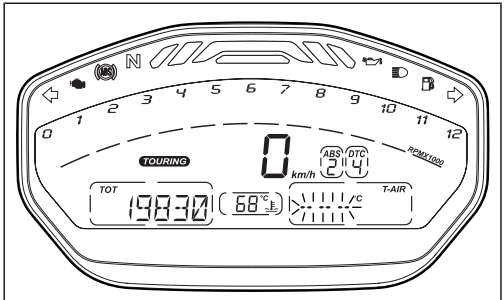

Fig. 34

Service indication (SERVICE)

This indication shows the user that the motorcycle is due for service and must be taken to a Ducati Authorised Service Centre.
The service warning indication can be reset only by the Authorised Ducati Service Centre during servicing.

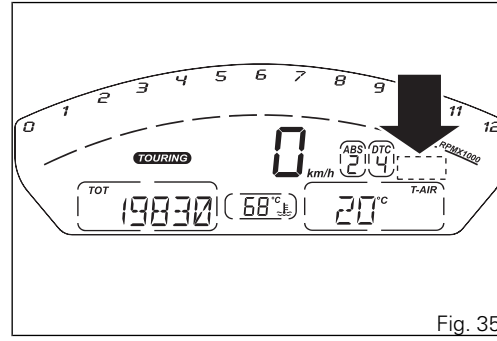

Fig. 35

OIL SERVICE zero warning

The first maintenance indication is "OIL SERVICE zero", enabled for 5 seconds upon each key-on when the odometer counter reaches the first 1,000 km (600 mi).

The indication is the display for 5 seconds of the flashing message "SERVICE", the Oil symbol and the message "OIL" upon each Key-ON; after 5 seconds both the message "SERVICE" and the Oil symbol become steady until Key-OFF or until an Authorised Ducati Service Centre performs a reset.

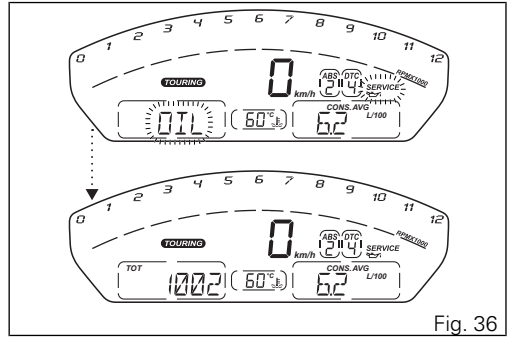

Fig. 36

The message "OIL SERVICE" or "DESMO SERVICE" countdown

After OIL SERVICE zero first reset (at 1,000 km - 600 mi), the instrument panel activates the countdown of the kilometres (or miles) left before the following service operation: OIL SERVICE (A) or DESMO SERVICE (B).

The kilometre count indication is shown upon Key-ON for 2 seconds; when there are 1,000 km (600 miles) left before the next service operation, the indication turns on upon every Key-ON for 5 seconds.

In other words, upon Key-ON the message "SERVICE" , the Oil and the Desmo symbol are displayed together with the indication of the kilometres left before the following service operation.

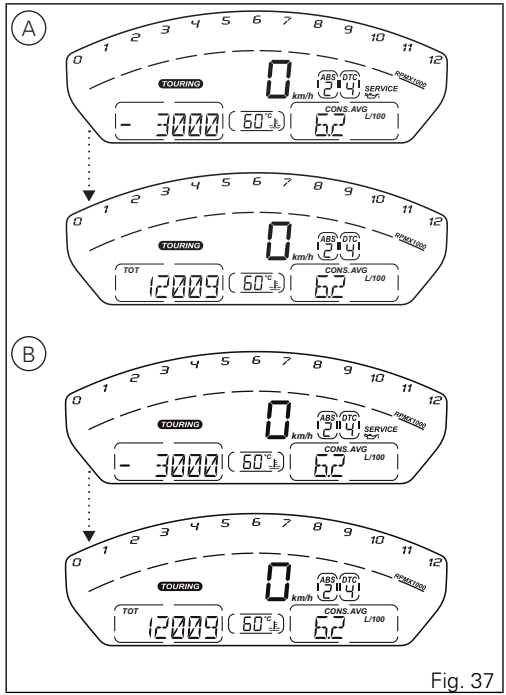

Fig. 37

"OIL SERVICE" or "DESMO SERVICE" warning

When the service threshold is reached, the warning for the type of service required is triggered: OIL SERVICE (A) or DESMO SERVICE (B).
The indication is the display for 5 seconds of the flashing message "SERVICE", the "OIL" or "DESMO" symbol as well as the message "DESMO" upon each Key-ON; after 5 seconds both the message "SERVICE" and the Oil or Desmo symbol become steady until Key-OFF or until an Authorised Ducati Service Centre performs a Reset.

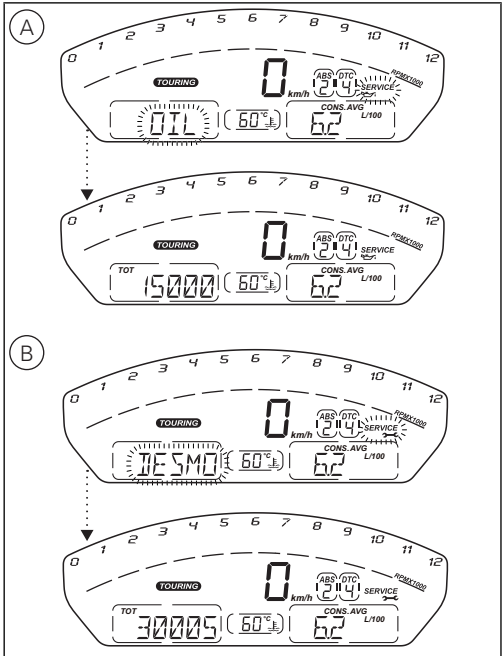

Fig. 38

Errors

The instrument panel manages error warnings in order to allow the rider to identify any abnormal motorcycle behaviour in real time.
Upon Key-ON, if there are active errors the instrument panel turns the EOBD light and Warning symbol ON and activates the Error page of the SETTING MENU. During standard motorcycle operation, upon the activation of an error the instrument panel turns the EOBD light and Warning symbol ON and activates the Error page of the SETTING MENU.

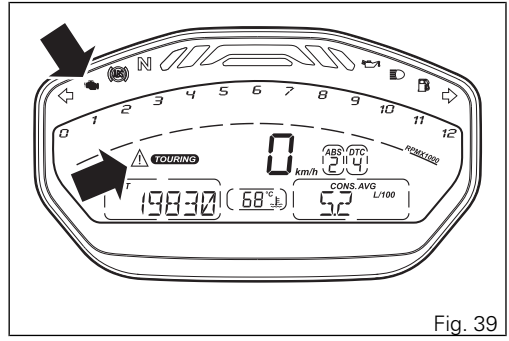

Fig. 39

Error warnings

To view the present errors, it is necessary to enter the Setting Menu, select "ERR." using buttons (1) and (2) (that, in case of active errors, is the first available page) and press button (4).
The instrument panel displays "ERR" steady ON and:

- the error type indication steady ON;
- the EXIT steady ON and its box flashing.

If several errors are active, the corresponding indications will be displayed one after the other, each remaining on display for 3 seconds.
When an error is triggered the EOBD light turns on as well.

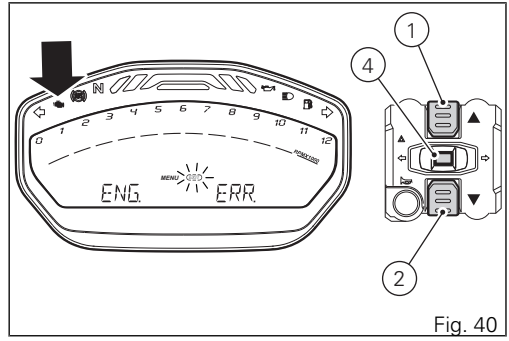

Fig. 40

Warning

When one or more errors are displayed, always contact a Ducati Dealer or authorised Service Centre.

Displayed errors description

Displayed error	**Description**
CAN LINE	CAN line BUS OFF
UNK-D	Control unit not acknowledged by the system - wrong SW
ABS	ABS control unit faulty communication / operation
BBS	BBS control unit faulty communication / operation
	BBS control unit general malfunction
	Exhaust valve motor malfunction
DSB	DSB control unit faulty communication / operation
IMMO	Key missing
	Key not recognised
	Antenna not working
ENG.	ECU control unit faulty communication / operation
	ECU control unit general malfunction
	Throttle position sensor malfunction
	Throttle motor or relay malfunction
	Pressure sensor malfunction
	Engine coolant temperature sensor malfunction
	Intake duct air temperature sensor malfunction

Displayed error	Description
	Injection relay malfunction
	Ignition coil malfunction
	Injector malfunction
	Engine rpm sensor malfunction
	Lambda sensor or Lambda sensor heater malfunction
	Motorcycle starting relay malfunction
	Secondary air sensor malfunction
FUEL	Reserve NTC sensor malfunction
SPEED	Front and/or rear speed sensor malfunction
BATT.	Battery voltage too high or too low
STAND	Side stand sensor not working
FAN	Electric cooling fan malfunction
T_AIR	Ambient air temperature sensor malfunction

Note

The message "FAN" can be displayed also in case of BBS control unit malfunction and its faulty communication with fans. Pay attention to engine temperature indication.

Error icons table

"WARNING LIGHT / ERROR" MESSAGE	ERROR
BBS	Black-Box control unit
ABS	ABS control unit
DSB	Instrument panel control unit
IMMO	Immobilizer antenna
ENG.	Engine control unit
CAN	Can Bus OFF
UNK-D	Software compatibility
FAN	Cooling fan
BATT.	Battery voltage

"WARNING LIGHT / ERROR" MESSAGE	ERROR
T-AIR	Air temperature sensor
STAND	Side stand sensor
SPEED	Speed sensor
FUEL	Low fuel sensor

Note

The message "FAN" can be displayed also in case of BBS control unit malfunction and its faulty communication with fans. Pay attention to engine temperature indication.

LAP time

LAP function information is available when the function is active.
When the LAP function is active and the FLASH button (3) is pressed, the messages "LAP" and "START LAP" will blink in menu 1 for 4 seconds and the function will be automatically displayed again.
Whenever FLASH button (3) is pressed, the display shows the time of the just ended lap with a resolution of one hundredth of a second (" 0’00’’00") for 10 seconds and the LAP number instead of the engine coolant temperature indication.
After 10 seconds, the display will automatically show the function that was displayed before pressing the FLASH button (3).
When storing the 30th LAP, the LAP function is stopped and upon any further press on the FLASH button (3), the instrument panel will display the FULL -- LAP flashing message for 4 seconds until the times are reset.

Note

When the LAP function is active, the FLASH button takes on the dual function of high beam "FLASH" and finish line control and storage for the LAP timer (new lap start indication).

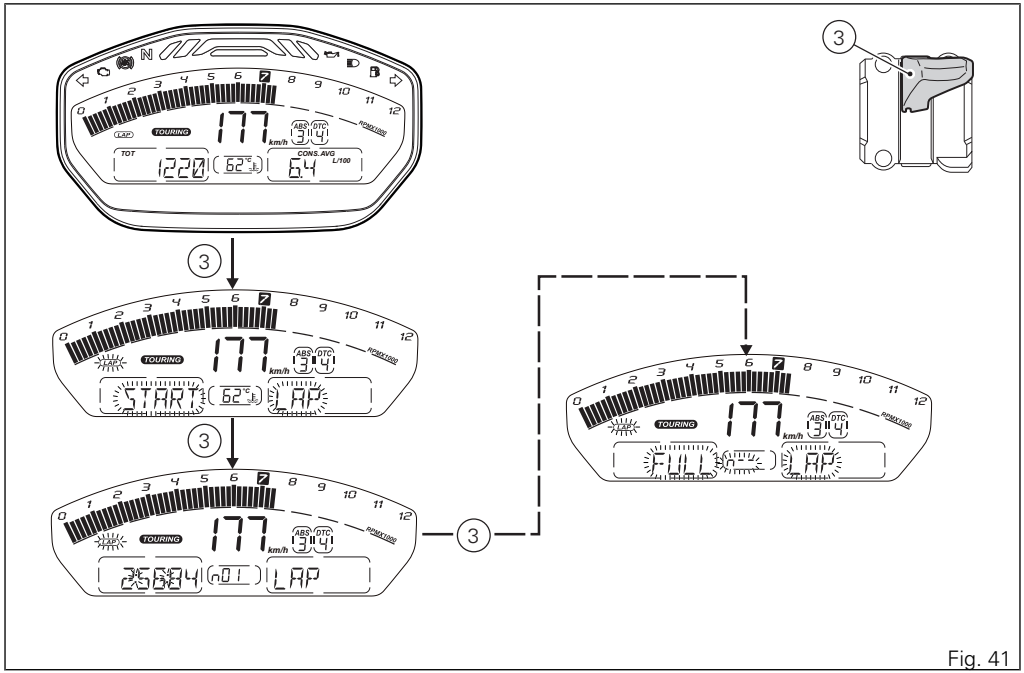
N
TOURING
177
km/h
ABS
DTC
LAP
TOT
1220
62
CONS. AVG
L/100
6.4
START
25684
LAP
FULL
3

Fig. 41

LAP recording

With the LAP function "active", it is possible to record the Lap time.
To record the lap time it is necessary to activate the LAP TIME function through the Setting Menu in the LAP page.
After enabling this function, lap time can be recorded as follows:

- the first time the rider presses button (3), the "timer" of the first lap starts and "START LAP" will be displayed flashing for 4 seconds in MENU 1: then the previous function will be displayed automatically;
- from this moment, whenever button (3) is pressed, the instrument panel will show automatically the lap time in MENU 1 for 10 seconds and the LAP "number" instead of the engine coolant temperature indication: after 10 seconds it will display the previous function.

30 laps max. can be recorded.
If the instrument panel "memory" is full, whenever button (3) is pressed, the instrument panel does not record any lap time and "FULL – LAP" will be displayed flashing for 4 seconds until lap times are reset. This indication will be displayed until all times are reset with the LAP erase function in the Setting Menu (ERASE).
When the LAP function is set disabled, the current "lap" is not stored.
If the LAP function is active and the motorcycle is suddenly turned off (Key-Off), the function will be automatically disabled: even if the lap timer was active, the current "lap" is not stored.
If the time is never "stopped", it will roll over upon reaching 9 minutes, 59 seconds and 99 hundredths; the lap timer starts counting from 0 (zero) and will keep running until the function is disabled.
If however the LAP function is switched on and the memory has not been cleared, but fewer than 30 laps have been saved (e.g. 18 recorded laps) the Instrument Panel records any left lap until memory is full (for instance: 12 further laps can be recorded).
In this function only the lap times being recorded are displayed; other data are anyway recorded (MAX speed, MAX rpm and limiter if reached), which can be later displayed with the "Stored LAPs displaying" function (LAP REC) in the Setting Menu.

Setting MENU

This menu allows enabling, disabling and setting some motorcycle functions.
To enter the SETTING MENU it is necessary to hold button (2) for 2 seconds, with Key-ON and motorcycle actual speed ≤(lower than or equal to) 20 km/h: within this menu, it is no longer possible to view any other function.
The SETTING MENU displays the following functions:

- Riding mode (R.M.)
- Battery (BAT.)
- Back light (B.L.)
- LAP (LAP)
- Clock (CLK)
- PIN code (PIN)
- RPM (RPM)
- Units setting (UNT)
- Errors (ERR.) (only if active errors are present)

For safety reasons, the setting menu can be accessed only when vehicle speed is below or equal to 20 Km/h; if this menu is accessed and vehicle speed is above 20 Km/h, the instrument panel will automatically quit it and shift back to main screen.

Press buttons (1) and (2) to highlight the customisable parameters one by one: in particular, use button (1) to highlight the following item and button (2) to highlight the previous item.
After highlighting the required parameter, press button (4) to open the corresponding MENU page.
If function is not available or temporarily disabled, the MENU page can not be opened.
To quit the SETTING MENU you shall highlight "EXIT" and press CONFIRM MENU button 4.

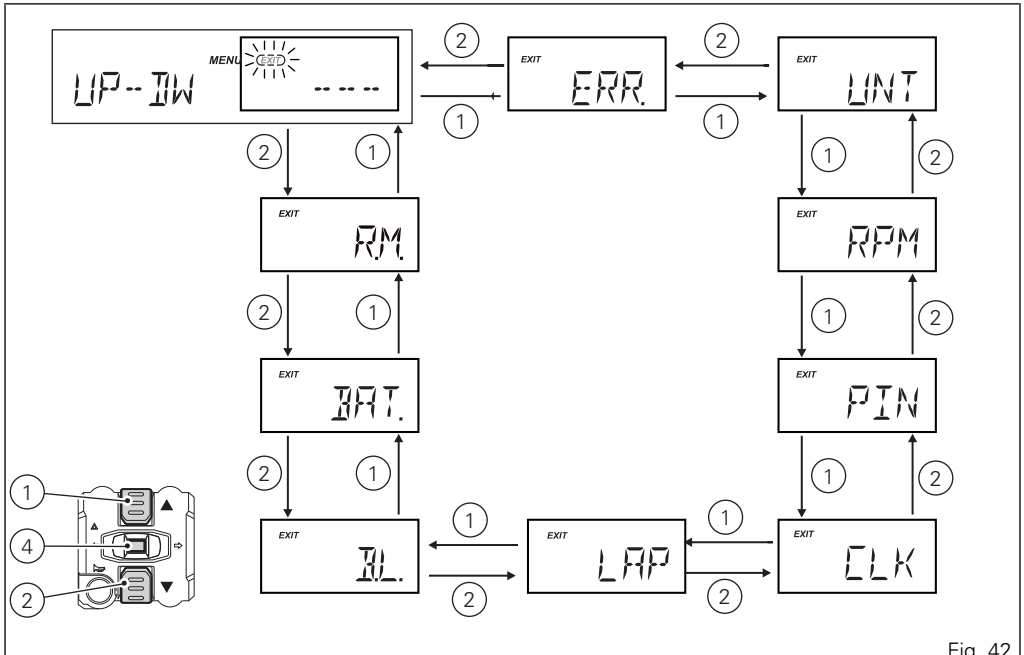
UP-DW
MENU
END
EXIT
ERR.
EXIT
UNT
EXIT
RM.
EXIT
RPM
EXIT
BAT.
EXIT
PIN
EXIT
BL.
EXIT
LAP
EXIT
CLK
1
2
4

Fig. 42

Customising the Riding Mode

All settings of every riding mode can be customised.
Enter the SETTING MENU.
Select the R.M (Riding mode) option by pressing button (1) or (2). Once function is highlighted, press CONFIRM MENU button (4).
You open the R.M. MENU (Riding mode).
After entering the function, the display shows the three available riding modes (SPORT, TOURING or URBAN). Press buttons (1) and (2) to select the riding mode to be customised (the arrow beside flashes).
Press CONFIRM MENU button (4) to enter the customisation of the selected Riding Mode.
While if you highlight "EXIT" and press button (4) you quit the sub-menu and go back to previous page.

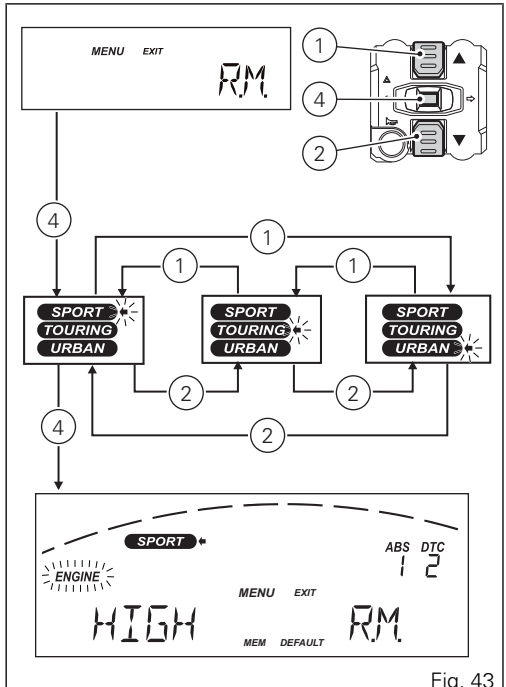

Fig. 43

The parameters that can be customised for every riding mode are the following:

- ENGINE
- DTC
- ABS
- DEFAULT (to restore the parameters set by Ducati for each riding mode)

When entering the customisation menu of the selected riding mode the ENGINE parameter is automatically highlighted (the relevant parameter flashes) and it is possible to scroll the menu items by pressing buttons (1) and (2) to select all available information (the selected parameter flashes) in the following sequence:

- ENGINE
- DTC
- ABS
- MEMORY
- EXIT
- DEFAULT

If you highlight "EXIT" and press button (4) you quit the sub-menu and go back to previous page.

Warning

Changes should only be made to the parameters by people who are experts in motorcycle set-up; if the parameters are changed accidentally, use the "DEFAULT" function to restore factory settings.

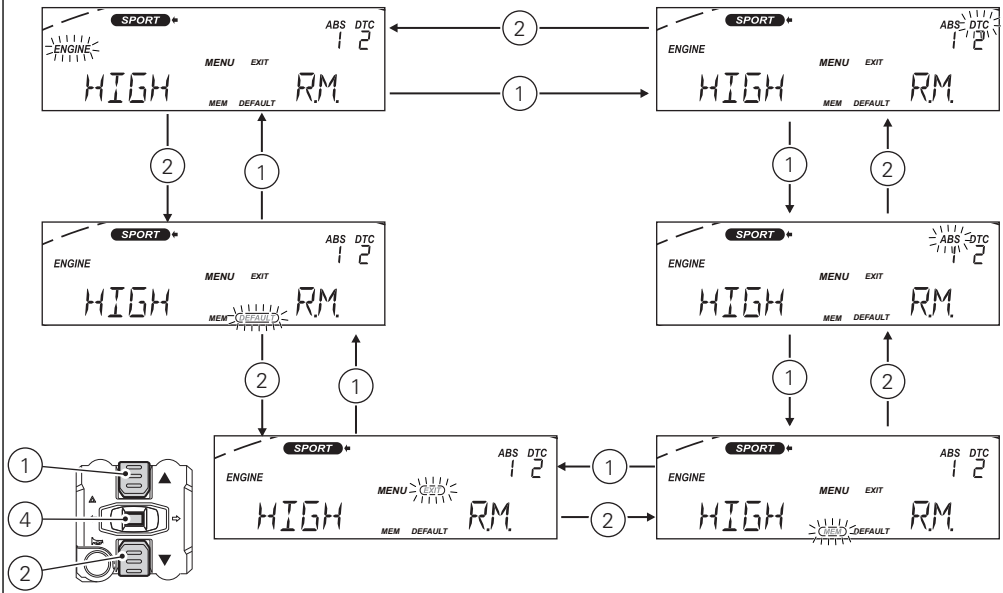

Fig. 44

Customising Riding Mode: Parameter storage

After changing a Riding Style parameter (ENGINE, DTC and/or ABS), to make the change effective, it is necessary to save it before quitting the customisation menu.
It is possible to save the parameters set for each riding mode.
To save the parameter settings of a Riding Mode, it is necessary to gain access to the SETTING MENU, use buttons (1) and (2) to select the message "R.M." (Riding Mode) and press button (4). Then use buttons (1) and (2) to select the riding mode to change and press button (4). Then use buttons (1) and (2) to select "MEMORY" (flashing) and keep button (4) pressed for 2 seconds; then the display will show "WAIT" (for 2 other seconds) followed by "MEM" and "OK" to confirm that the new parameters have been memorised.

Any parameter change made is saved and remains in the memory also after a Battery-OFF. If you highlight "EXIT" and press button (4) you quit the sub-menu and go back to previous page.

Warning

Changes should only be made to the parameters by people who are experts in motorcycle set-up; if the parameters are changed accidentally, use the "DEFAULT" function to restore factory settings.

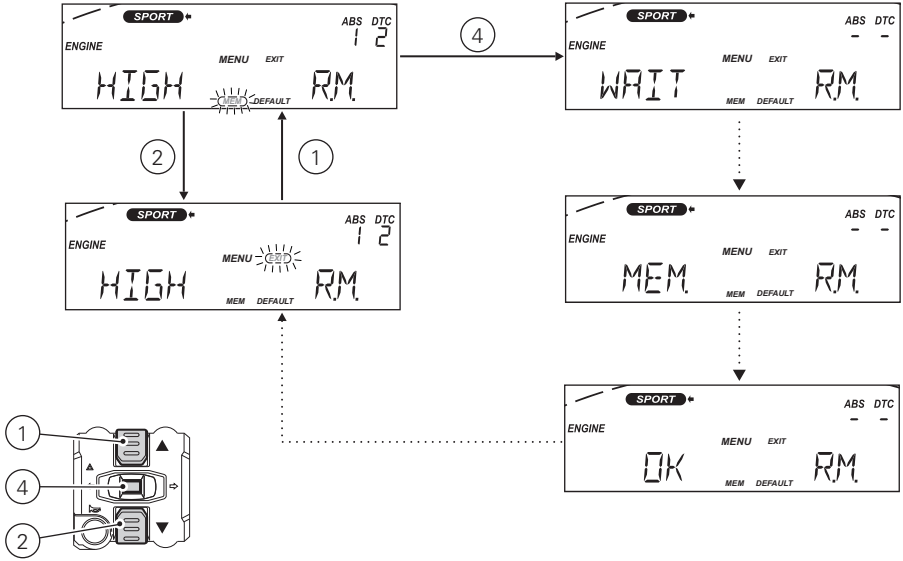
SPORT
ENGINE
ABS DTC
1 2
MENU EXIT
HIGH
RM
MEM DEFAULT
4
SPORT
ENGINE
ABS DTC
- -
MENU EXIT
WAIT
RM
MEM DEFAULT
2
1
SPORT
ENGINE
ABS DTC
1 2
MENU
HIGH
RM
MEM DEFAULT
SPORT
ENGINE
ABS DTC
- -
MENU EXIT
MEM
RM
MEM DEFAULT
SPORT
ENGINE
ABS DTC
- -
MENU EXIT
OK
RM
MEM DEFAULT
1
4
2

Fig. 45

Customising the Riding Mode: Engine setting

This function customises engine power associated with each riding mode.
Enter the SETTING MENU. Select the R.M (Riding Mode) option by pressing button (1) or (2).
Once function is highlighted, press CONFIRM MENU button (4). You open the R.M. Menu (Riding mode).
Select the desired riding mode (SPORT, TOURING or URBAN), by pressing button (1) or (2). After selecting the desired riding mode (arrow beside the flashing riding mode), press the MENU CONFIRMATION button (4).
You open the selected riding mode customisation Menu.
Select the parameter to be customised (ENGINE), by pressing button (1) or (2). Once the desired parameter is highlighted, press CONFIRM MENU button (4).
When entering the function, the currently set engine power (HIGH, MED or LOW) starts flashing. Use buttons (1) and (2) to select the new desired engine power and press button (4) to confirm.

The value will become automatically steady and the message "EXIT" will be highlighted.

To exit the menu and go back to previous page, select "EXIT" and press button (4). The instrument panel will go back to the previous menu level and it will be possible to start the "Parameter storage" procedure (M).

Note

To save the new ENGINE parameter setting, follow the procedure "Storing Riding Mode settings" described in paragraph "Parameter storage". If the user quits the Riding Mode customisation menu without performing the storing procedure, the just-selected settings will be lost.

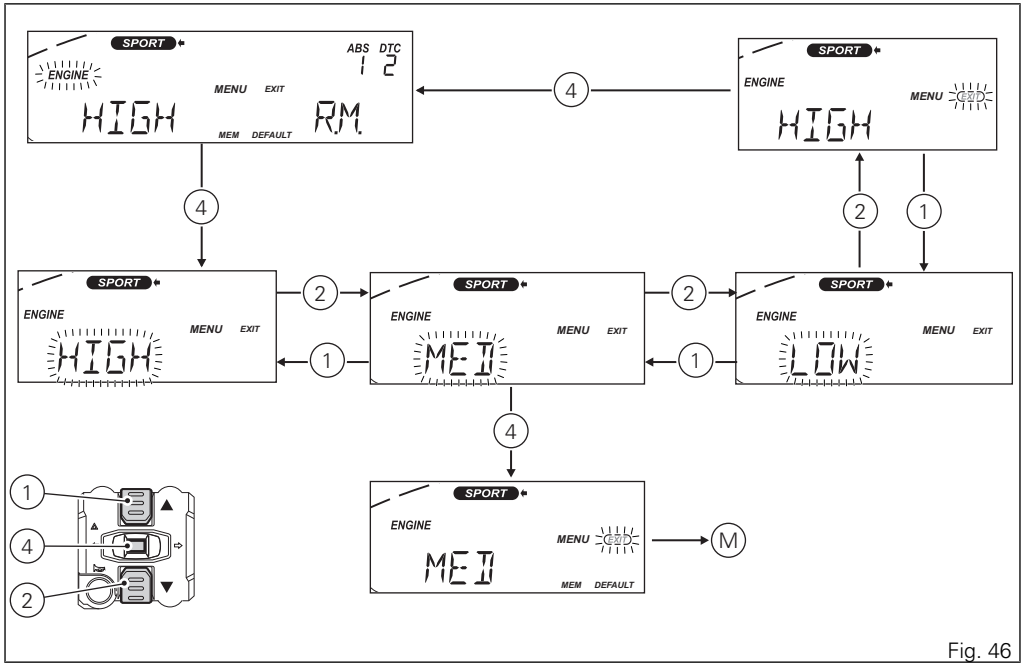
SPORT
ABS DTC
1 2
ENGINE
MENU EXIT
HIGH RM
MEM DEFAULT
4
SPORT
ENGINE
MENU
HIGH
2
1
4
SPORT
ENGINE
MENU EXIT
HIGH
2
1
SPORT
ENGINE
MENU EXIT
MED
2
1
SPORT
ENGINE
MENU EXIT
LOW
4
SPORT
ENGINE
MENU
MED
MEM DEFAULT
M
1
4
2

Fig. 46

Customising the Riding Mode: DTC level setting

This function disables or sets DTC level for the selected riding mode.
Enter the SETTING MENU. Select the R.M (Riding mode) option by pressing button (1) or (2).
Once function is highlighted, press CONFIRM MENU button (4).
You open the R.M. Menu (Riding mode). Select the desired riding mode (SPORT, TOURING or URBAN), by pressing button (1) or (2).
After selecting the desired riding mode (arrow beside the flashing riding mode), press the MENU CONFIRMATION button (4).
You open the selected riding mode customisation Menu.
Select the parameter to be customised (DTC), by pressing button (1) or (2).
Once the desired parameter is highlighted, press CONFIRM MENU button (4).

When entering the function, the currently set DQS level or status starts flashing. Use buttons (1) and (2) to select the new desired intervention level (from 1 to 8) or the symbol " – " (that identifies the "OFF" status) and press button (4) to confirm.
The value will become automatically steady and the message "EXIT" will be highlighted.
To exit the menu and go back to previous page, select "EXIT" and press button (4). The instrument panel will go back to the previous menu level and it will be possible to start the "Parameter storage" procedure (M).

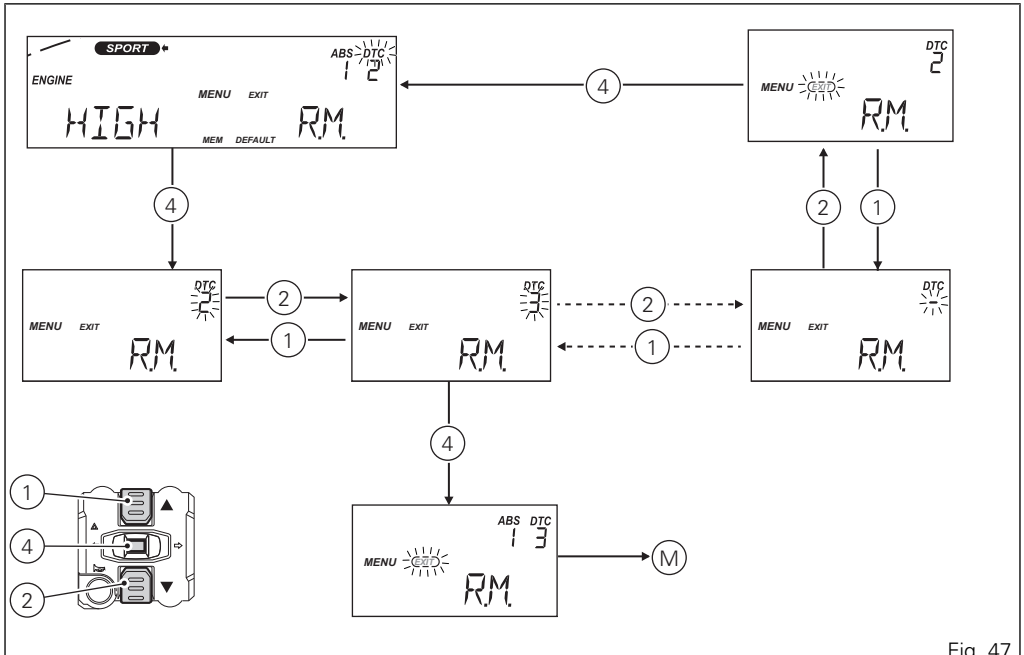
SPORT
ENGINE
ABS DTC
1 2
MENU EXIT
HIGH
R.M.
MEM DEFAULT
4
DTC
2
MENU EXIT
R.M.
2
1
DTC
4
MENU EXIT
R.M.
2
1
DTC
3
MENU EXIT
R.M.
2
1
DTC
MENU EXIT
R.M.
4
ABS DTC
1 3
MENU EXIT
R.M.
M
1
4
2

Fig. 47

Note

To save the new DTC parameter setting, follow the procedure "Storing Riding Mode settings" described in paragraph "Parameter storage". If the user quits the Riding Mode customisation menu without performing the storing procedure, the just-selected settings will be lost.

Note

By setting "– " (Off), the DTC will be disabled.

Customising the Riding Mode: ABS setting

This function disables or sets ABS level for the selected riding mode. Enter the SETTING MENU. Select the R.M (Riding mode) option by pressing button (1) or (2).
Once function is highlighted, press CONFIRM MENU button (4).
You open the R.M. Menu (Riding mode). Select the desired riding mode (SPORT, TOURING or URBAN), by pressing button (1) or (2).
After selecting the desired riding mode (arrow beside the flashing riding mode), press the MENU CONFIRMATION button (4). You open the selected riding mode customisation Menu. Select the parameter to be customised (ABS), by pressing button (1) or (2). Once the desired parameter is highlighted, press CONFIRM MENU button (4).
When entering the function, the currently set ABS level or status starts flashing. Use buttons (1) and (2) to select the new desired intervention level (from 1 to 3) or the symbol " – " (that identifies the "OFF" status) and press button (4) to confirm.

The value will become automatically steady and the message "EXIT" will be highlighted.

To exit the menu and go back to previous page, select "EXIT" and press button (4). The instrument panel will go back to the previous menu level and it will be possible to start the "Parameter storage" procedure (M).

Note

To save the new ABS parameter setting follow the procedure "Storing Riding Mode settings" described in paragraph "Parameter storage". If the user quits the Riding Mode customisation menu without performing the storing procedure, the just-selected settings will be lost.

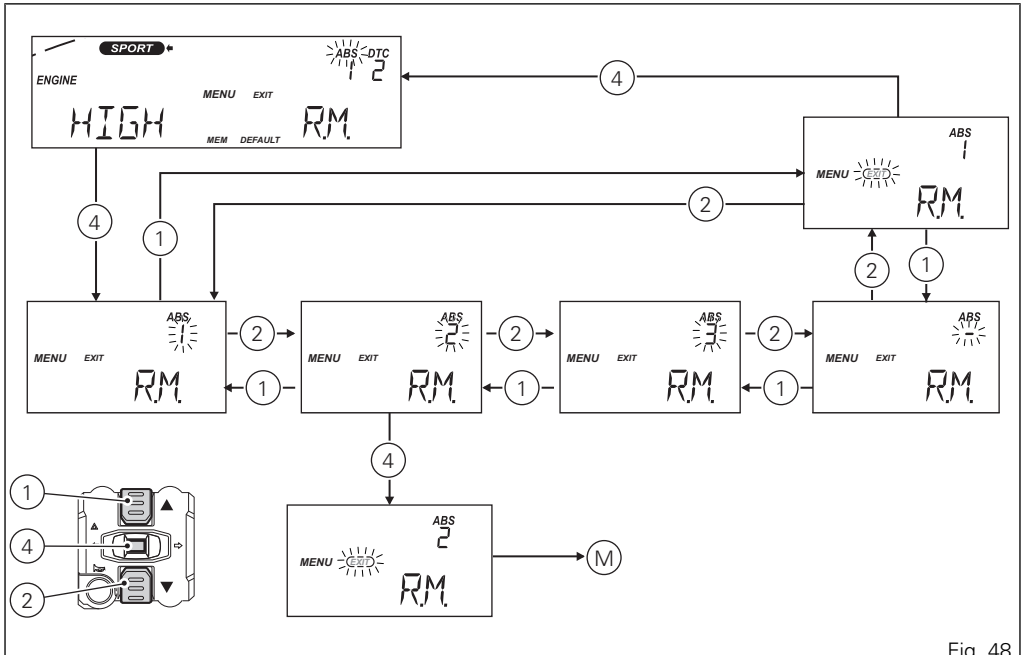
SPORT
ENGINE
ABS
DTC
1 2
MENU
EXIT
HIGH
R.M.
MEM
DEFAULT
4
ABS
1
MENU
END
R.M.
2
1
ABS
1
MENU
EXIT
R.M.
ABS
2
MENU
EXIT
R.M.
ABS
3
MENU
EXIT
R.M.
ABS
MENU
EXIT
R.M.
ABS
2
MENU
END
R.M.
M

Fig. 48

Note

By setting "–" (Off), the ABS will be disabled and the relevant warning light will start flashing.

Important

When setting the ABS OFF, Ducati recommends paying particular attention to the braking and riding style.

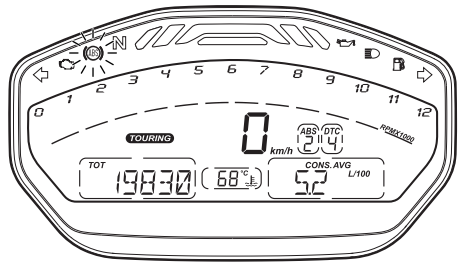

Fig. 49

Customising Riding Mode: restore default settings (ALL DEFAULT)

This function allows restoring all default values set by Ducati for the parameters relating to each riding mode (SPORT, TOURING or URBAN). Enter the SETTING MENU.

Select the R.M (Riding mode) option by pressing button (1) or (2). Once function is highlighted, press CONFIRM MENU button (4). You open the R.M. Menu (Riding mode). Select the DEFAULT box by pressing button (1) or (2). Once the desired indication is selected, press CONFIRM MENU button (4) for 3 seconds.

After 3 seconds, the three arrows on the Riding Mode right side will flash (for 2 seconds); then the display will show "DF-OK" for 2 seconds to indicate that the default parameters have been restored.

After 2 seconds, the "EXIT" box starts flashing; press button (4) to quit and go back to the Setting Menu.

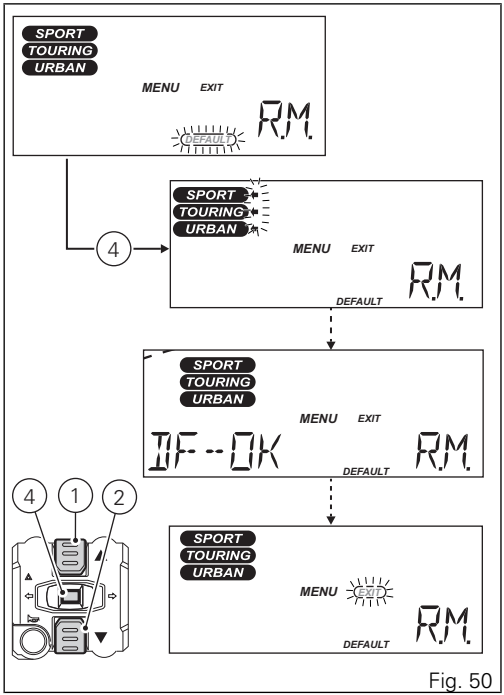

Fig. 50

Customising the Riding Mode: Restoring default settings

This function allows restoring the default values set by Ducati for the parameters relating to each riding mode. Enter the SETTING MENU.
Select the R.M (Riding mode) option by pressing button (1) or (2). Once function is highlighted, press CONFIRM MENU button (4). You open the R.M. Menu (Riding mode). Select the desired riding mode (SPORT, TOURING or URBAN), by pressing button (1) or (2). After selecting the desired riding mode (arrow beside the flashing riding mode), press the MENU CONFIRMATION button (4).
Select DEFAULT (DEFAULT box flashing) by pressing button (1) or (2). Once desired parameter is highlighted, keep CONFIRM MENU button (4) pressed for 3 seconds.

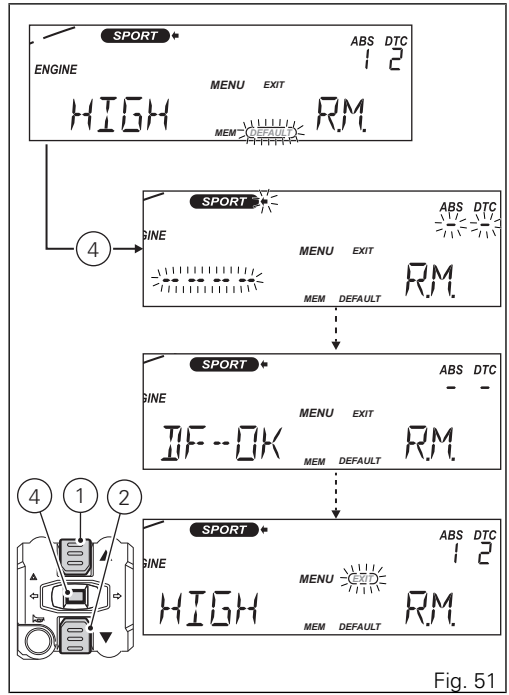

Fig. 51

After 3 seconds the arrow on the Riding Mode right side starts flashing and blinking dashes will be displayed instead of all parameters (ENGINE, DTC and ABS). Then the display shows "DF-OK" for 2 seconds to indicate that the default parameters have been restored. After 2 seconds, the "EXIT" box starts flashing; press button (4) to quit and go back to the Setting Menu.

Battery voltage

This function allows you to check the motorcycle battery voltage. Enter the SETTING MENU. Select the BAT. (Battery) option by pressing button (1) or (2). Once function is highlighted, press CONFIRM MENU button (4). You open the BAT. Menu (Battery).
The information will be displayed as follows:

- if battery voltage is between 11.8 V and 14.9 V the reading will be displayed steady;
- if battery voltage is between 11.0 V and 11.7 V the reading will be displayed flashing;
- if battery voltage is between 15.0 V and 16.0 V the reading will be displayed flashing;
- if the battery voltage is equal to or lower than 10.9 Volt, the "LOW" message starts flashing;
- if the battery voltage is higher than 16.1 Volt, the "HIGH" message starts flashing;

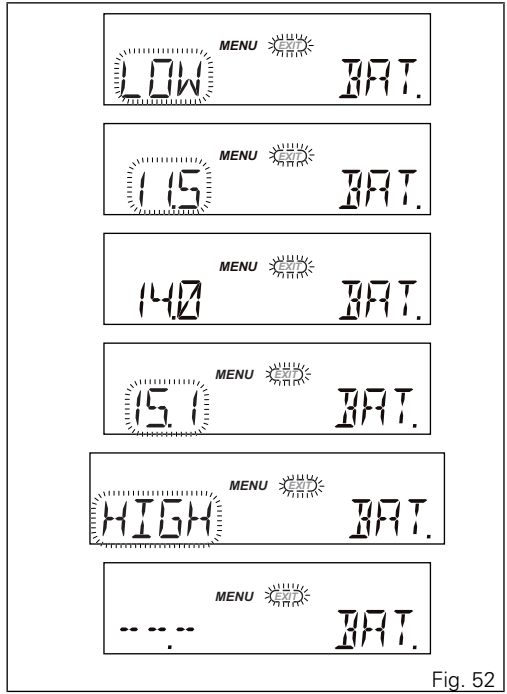

Fig. 52

if the instrument panel is not receiving battery voltage value, a string of three dashes "- - -" is displayed.
To quit the menu and go back to Setting Menu main page, select EXIT and press button (4).

Back-lighting setting

This function allows adjusting the backlighting intensity.
To set the backlighting enter the SETTING MENU, use buttons (1) and (2) to select "B.L." and press button (4) to confirm.
When accessing the function, the active mode flashes whereas the MENU and EXIT messages will be steady on.
Use buttons (1) and (2) to select the desired brightness level (HIGH, MED, LOW) and press button (4) to confirm.
Select HIGH to set the display backlighting maximum brightness - recommended in conditions of strong ambient light.
Select MED to set the display backlighting medium brightness (70%) - recommended in conditions of medium/low ambient light.
Select LOW to set the display backlighting minimum brightness (50%) - recommended in conditions of low ambient light and/or during the night.
After confirming, the "EXIT" box will start flashing.
To exit the menu and go back to previous page, select "EXIT" and press button (4).

Note

In the event of an interruption of the power supply from the Battery, when power is restored, at the next Key-On, the backlighting will always be set by default to maximum brightness.

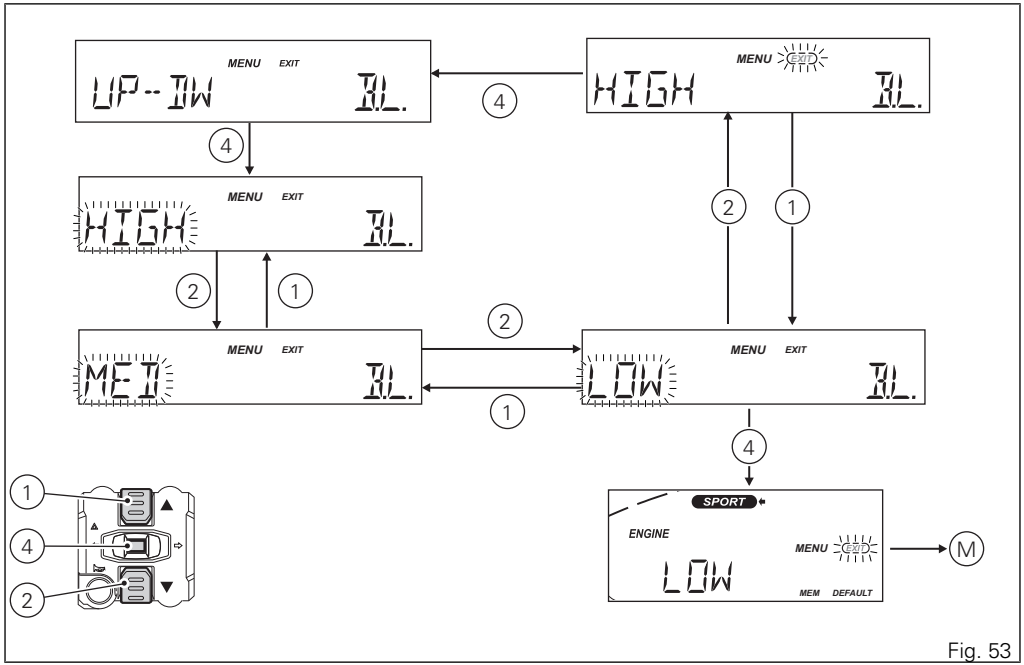
MENU EXIT
UP--DW BL.
MENU EXIT
HIGH BL.
MENU EXIT
HIGH BL.
MENU EXIT
MED BL.
MENU EXIT
LOW BL.
SPORT
ENGINE
LOW
MENU EXIT
MEM DEFAULT
M
1
2
4

Fig. 53

LAP

This function allows enabling/disabling LAP (lap time) function.
To open the LAP function menu, enter the Setting Menu. Select LAP option, by pressing button (1) or (2). Once function is highlighted, press button (4). You open the LAP Menu.

When accessing this function, the status of the currently set LAP function is displayed ("ON" or "OFF") on the left side of MENU 1.
When button (2) is pressed, the LAP function status indication starts flashing and the other available function status option is displayed. If it was OFF, the ON indication will start flashing and vice versa.
Then it is possible to enable or disable the LAP function by pressing button (4) when the indication is flashing:

- If OFF is saved, LAP function will be disabled;
- Storing the ON condition enables the LAP function to record the LAPs.

When enabling the Function (ON), to confirm its activation the display will show also the LAP indication with the box on top left, under the rev counter.

To exit, press button (4) when the EXIT indication box flashes.

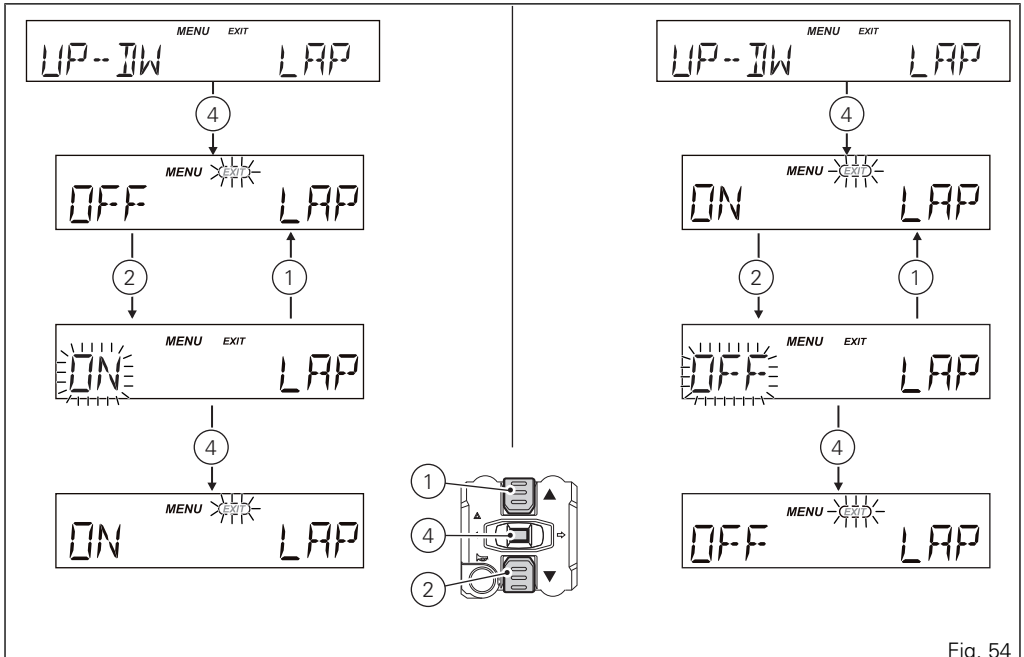
MENU EXIT
UP-DW LAP
4
MENU EXIT
OFF LAP
2
1
MENU EXIT
ON LAP
4
MENU EXIT
ON LAP
1
4
2
MENU EXIT
UP-DW LAP
4
MENU EXIT
ON LAP
2
1
MENU EXIT
OFF LAP
4
MENU EXIT
OFF LAP

Fig. 54

Note

When the LAP function is active, the FLASH button takes on the dual function of high beam "FLASH" and LAP timer start / stop (new lap start indication).

Note

Upon Key-OFF, the "LAP" function status is saved to restore it upon next Key-ON.

Note

When the battery is off, if the LAP function is active (ON), it is automatically disabled.

Displaying the stored Laps

To view the stored LAPs, you must enter the SETTING MENU.
Select "LAP" option, by pressing button (1) or (2).
Once function is highlighted, press CONFIRM MENU button (4).
Press buttons (1) and (2) to select "DATA" (flashing) and press button (4) to confirm.
The instrument panel displays:

- A) the number of maximum RPM reached in the recorded lap;
- B) the maximum speed reached in the recorded LAP;
- C) the recorded lap time (for instance 2:05:84) with the indication of the MINUTES, SECONDS and HUNDREDTH OF A SECOND;
- D) the number of the displayed lap (for instance no. 1).

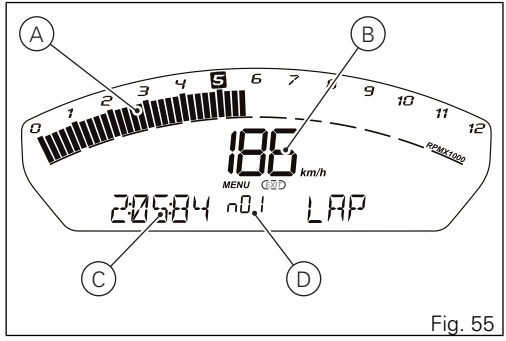

Fig. 55

Press buttons (1) and (2) to highlight stored LAPS one by one; in particular: use button (2) to view the next lap; use button (1) to view the previous lap.
To exit the menu and go back to previous page, select EXIT and press button (4).

Note
The MAX stored speed is the one shown on the display (increased by 5%).

Note
If the MAX speed reading exceeds 299 Km/h (186 mph) while the information is stored, the speed that was reached is still displayed (example: 316 Km/h).

Note
If there is no reading in the memory, the 30 times are shown, with the display showing "-.–.-", MAX rpm = 0 and MAX speed = - - -.

Note
If while recording the LAP the engine reaches the threshold that precedes the rev limiter or rev limiter threshold, the relevant Over_Rev light will turn on when displaying the stored times.

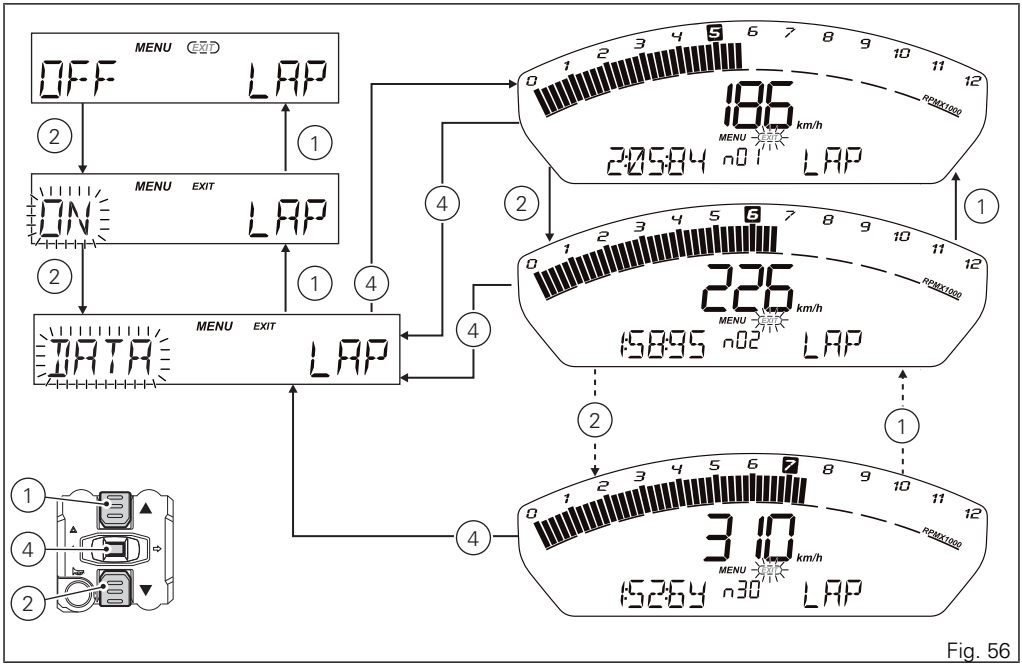
MENU EXIT
OFF LAP
MENU EXIT
ON LAP
MENU EXIT
DATA LAP
186 km/h
MENU
20:04 n01 LAP
226 km/h
MENU
15:95 n02 LAP
310 km/h
MENU
15:54 n30 LAP
RPMX1000
1
2
4

Fig. 56

Erasing stored Laps

To erase the stored LAPs, you must enter the SETTING MENU.
Select "LAP" option, by pressing button (1) or (2).
Once function is highlighted, press CONFIRM MENU button (4).
Press buttons (1) and (2) to select "ERASE" (flashing) and keep button (4) pressed for 3 seconds to confirm.
After 3 seconds, the instrument panel shows the message "WAIT" for 2 seconds, followed by "OK" to indicate that the Laps have been erased.

Note

If the stored times are deleted while the LAP function is active, it will be automatically deactivated.

To quit, press button (4).

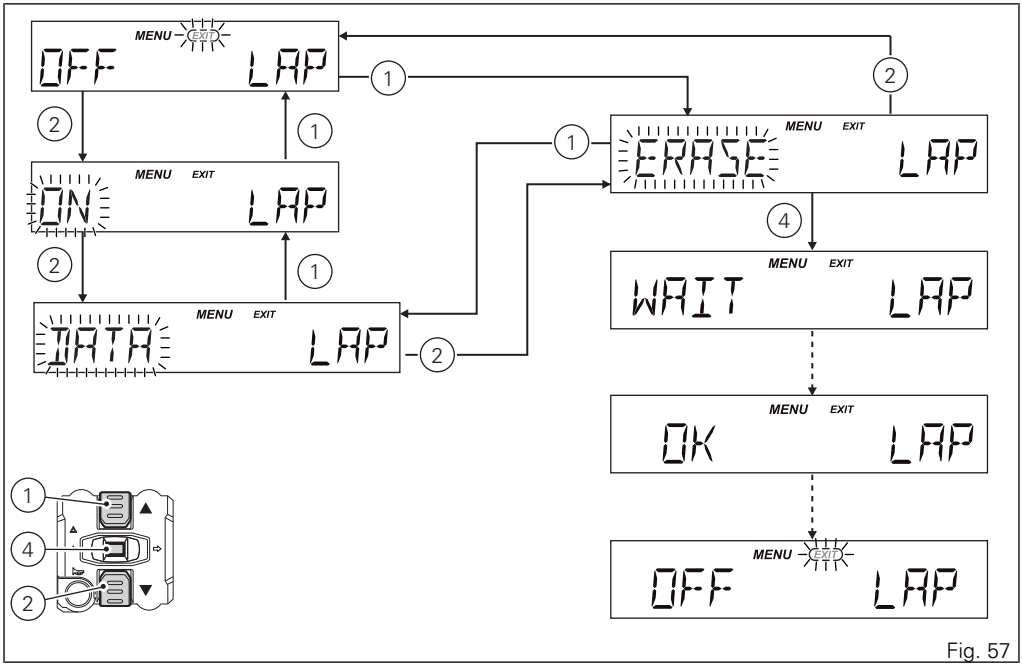
MENU EXIT
OFF LAP
MENU EXIT
ON LAP
MENU EXIT
DATA LAP
MENU EXIT
ERASE LAP
MENU EXIT
WAIT LAP
MENU EXIT
OK LAP
MENU EXIT
OFF LAP
1
2
4

Fig. 57

Clock setting

This function allows setting the clock.
To view this function, enter the Setting Menu, use button (1) or (2) to select "CLK" and press button (4).
To access the setting function, keep button (2) pressed for 3 seconds.
After 3 seconds it is possible to set the clock as follows:

- the "AM" indication starts flashing;
  - if you press button (2) the "PM" indication starts flashing;
  - if you press button (1) you will return to the previous step (if it is 00:00, when switching between "AM" to "PM", 12:00 will be displayed);
- press button (4) to shift to hour setting, hours will start flashing;
  - each time you press button (2), the digit will increase by one hour. If you hold button (2) down, the number increases cyclically in steps of one hour every second (when the button is held depressed, the hours do not flash);
- pressing button (4) gives access to the minute setting mode; minutes start to flash;
  - each time you press button (2), the digit will increase by 1 minute. If you hold button (2) pressed, the count increases cyclically in steps of 1 minute every second;
  - if button (2) is kept pressed for more than 5 seconds, steps increase in steps of 1 every 100 ms (seconds will not flash while button (2) is pressed).

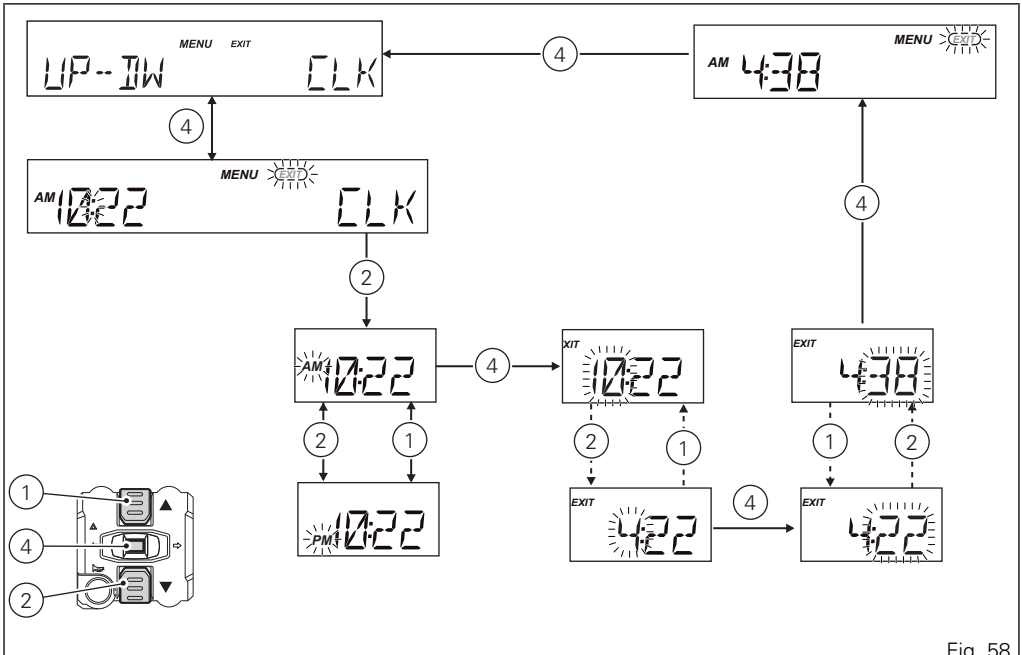
MENU
EXIT
UP--DW
CLK
MENU
EXIT
AM
4:38
MENU
EXIT
AM
10:22
CLK
AM
10:22
EXIT
10:22
EXIT
4:38
PM
10:22
EXIT
4:22
EXIT
4:22
1
2
4

Fig. 58

To confirm (store) the new set time press button (4). The EXIT box starts flashing and press button (4) to go back to the setting menu.

Note

In case of battery off, when the Voltage is restored and upon next Key-On, clock will have to be set again, i.e. it will automatically start counting from 00:00.

To quit, press button (4).

Pin Code

This function allows enabling and then modifying a 4-digit PIN code to "temporarily" start the vehicle in case of Immobilizer system malfunction.
The PIN CODE is initially not present in the motorcycle, it must be activated by the user by entering his/her -digit PIN in the instrument panel, otherwise the motorcycle cannot be started temporarily in the case of a malfunction. To activate this function, refer to "Entering the PIN CODE" procedure.
To change the PIN refer to "Changing the PIN CODE" procedure.
In order to temporarily start the motorcycle in case of malfunction of the Immobilizer system, please refer to the "Vehicle Release" procedure.

Warning

The motorcycle owner must activate (store) the PIN code; if there is already a stored PIN, contact an Authorised Ducati Dealer to have the function "reset". To perform this procedure, the Authorised Ducati Dealer may ask you to demonstrate that you are the owner of the motorcycle.

Entering the PIN CODE

To activate the PIN CODE function and enter your own PIN CODE you must open the SETTING MENU. Select "PIN" option, by pressing button (1) or (2). Once function is highlighted, press CONFIRM MENU button (4).

Note

If upon accessing this function, the "O : " (Old) indication is displayed together with four flashing dashes "- - - -", a PIN code is already stored and the Function is already active.

When accessing the function, the display will show "N:" (new) followed by four flashing dashes "- - - -". To go back to the previous indication without activating a PIN CODE, press button (2); as soon as the "EXIT" box starts flashing, press button (4) again. Entering the code:

1) Press button (4), only one digit indicating "0" starts flashing;
2) Each time you press the button (2) the displayed number increases by one (+ 1) up to "9" and then starts back from "0";
3) Each time you press the button (1) the displayed number decreases by one (- 1) up to "1" and then starts back from "0";
4) To confirm the number, press the button (4);

Repeat the procedures until you confirm all the digits of the PIN CODE.

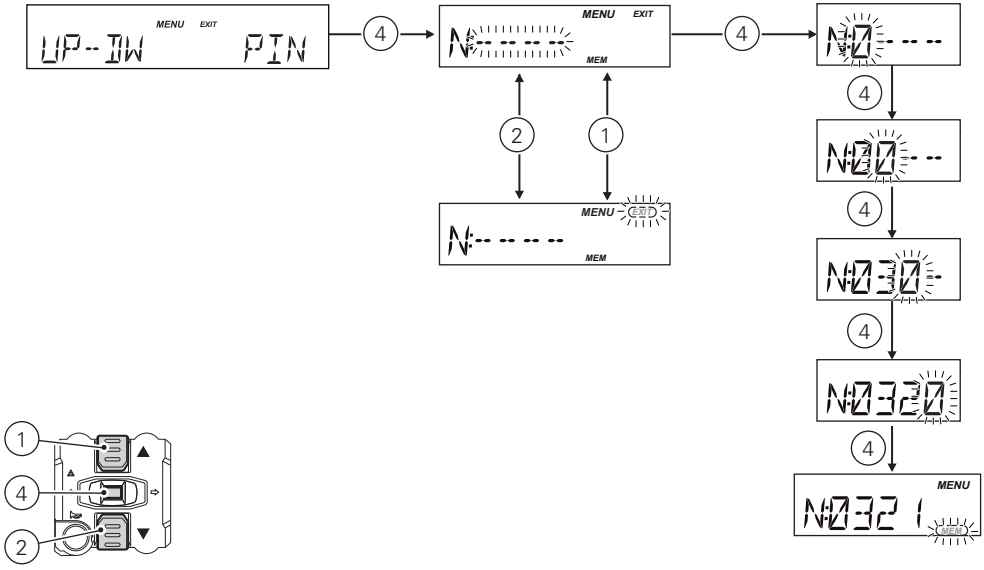

Fig. 59

When you press button (4) to confirm the fourth and last digit, the instrument panel highlights the message "MEM" and the relevant box.
To memorise the entered PIN, keep button (4) pressed for 2 seconds.
If settings have been saved (D), the message "MEM" and the relevant box will be shown steady ON for 2 seconds, and then the "EXIT" box will start flashing.
Once the first PIN CODE is stored, this menu page is no longer available and is replaced by the page for changing the PIN CODE.
To quit, press button (4).

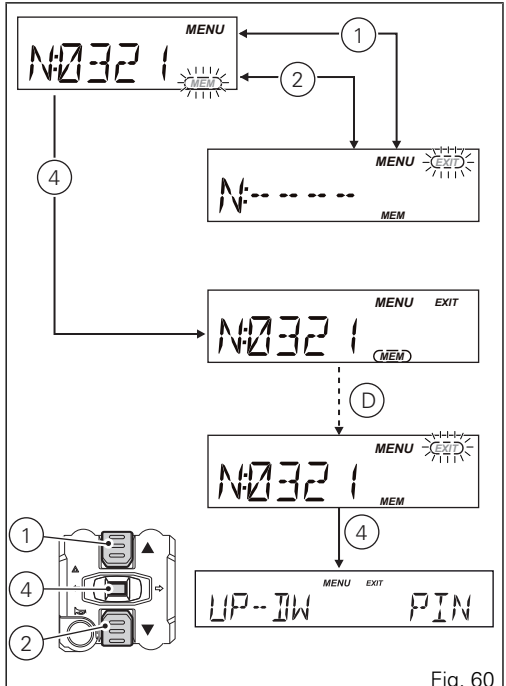

Fig. 60

Changing the PIN CODE

To change the existing PIN CODE and activate a new one, you must open the SETTING MENU.
Select "PIN" option, by pressing button (1) or (2). Once function is highlighted, press CONFIRM MENU button (4).

Note

If upon accessing this function, the "N : " (New) and four flashing dashes "- - - -" are shown, it means that the PIN CODE has never been activated and it is necessary to do it.

When accessing the function, the display will show "O: " (old) followed by four flashing dashes "- - - -".

Note

To change the PIN CODE, you must know the already stored PIN.

To go back to the previous indication without modifying the PIN CODE, press button (2); as soon as the "EXIT" box starts flashing, press button (4) again.

Entering the "old" code:

1) Press button (4), only one digit indicating "0" starts flashing;
2) Each time you press the button (2) the displayed number increases by one (+ 1) up to "9" and then starts back from "0";
3) Each time you press the button (1) the displayed number decreases by one (- 1) up to "1" and then starts back from "0";
4) To confirm the number, press the button (4);

Repeat the procedures until you confirm all the digits of the PIN CODE.

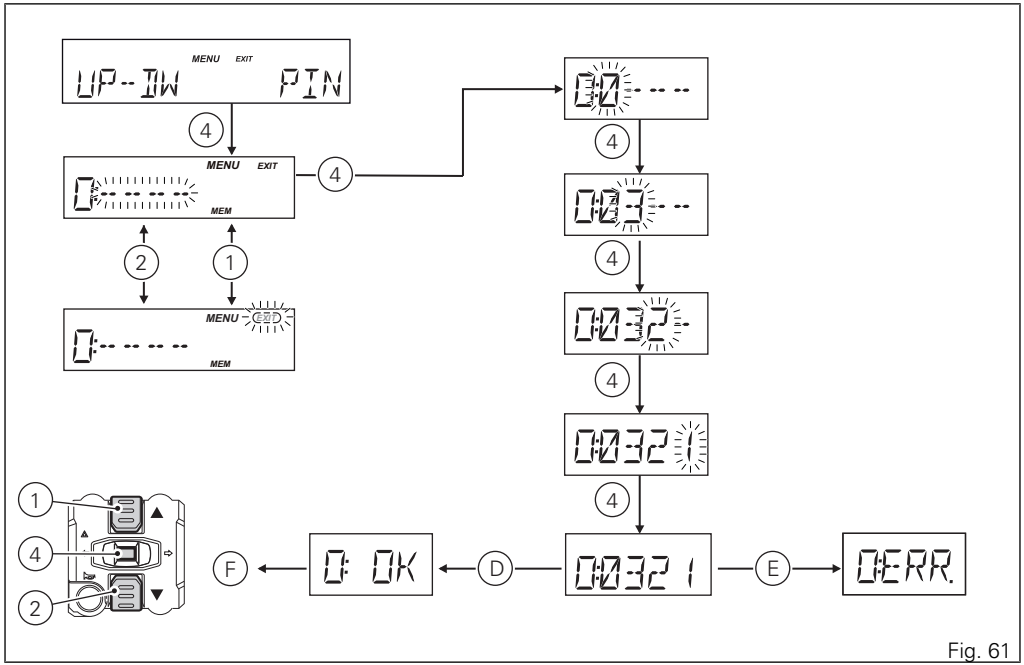
MENU EXIT
UP-IW PIN
MENU EXIT
MEM
MENU
MEM
0:0
0:03
0:032
0:0321
0:03210
0: OK
0:ERR.
1
2
4
D
E
F

Fig. 61

After pressing button (4) to confirm the fourth and last figure, the 4-digit code stops flashing.
Press button (4) for 3 seconds to check the entered PIN CODE. After 3 seconds:

- if the PIN CODE is correct (D), the instrument panel shows "OK" flashing for 2 seconds, followed by " N: " (new) and four flashing dashes "- - - -" relevant to the new PIN CODE (F);
- if the PIN CODE is not correct (E), the instrument panel shows "ERR." flashing for 2 seconds, followed by "EXIT".

Repeat the procedures until you confirm all the digits of the PIN CODE.

Entering the "new" code:

1) Press button (4), only one digit indicating "0" starts flashing;
2) Each time you press the button (2) the displayed number increases by one (+ 1) up to "9" and then starts back from "0";
3) Each time you press the button (1) the displayed number decreases by one (- 1) up to "1" and then starts back from "0";
4) To confirm the number, press the button (4);

Repeat the procedures until you confirm all the digits of the PIN CODE.

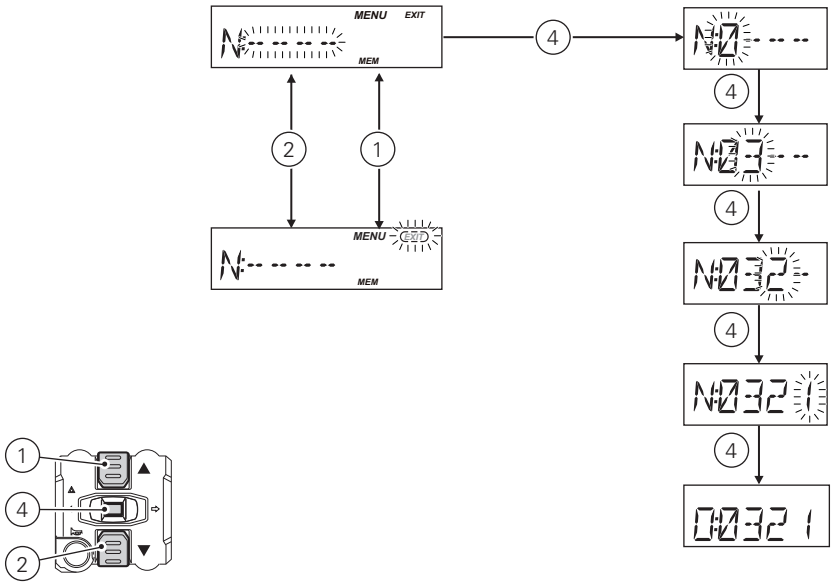

Fig. 62

When you press button (4) to confirm the fourth and last digit, the instrument panel highlights the message "MEM" and the relevant box will start flashing.
To save the new setting, hold button (4) for 2 seconds while the message "MEM" is highlighted.
If settings have been saved (D), the message "MEM" and the relevant box will be shown steady ON for 2 seconds, and then the "EXIT" box will start flashing.
If settings have not been saved, the instrument panel highlights again the string of four dashes "- - - -" of the new PIN to allow the rider to try again and enter a new code.
To quit, press button (4).

Note

You can change your PIN CODE an unlimited number of times.

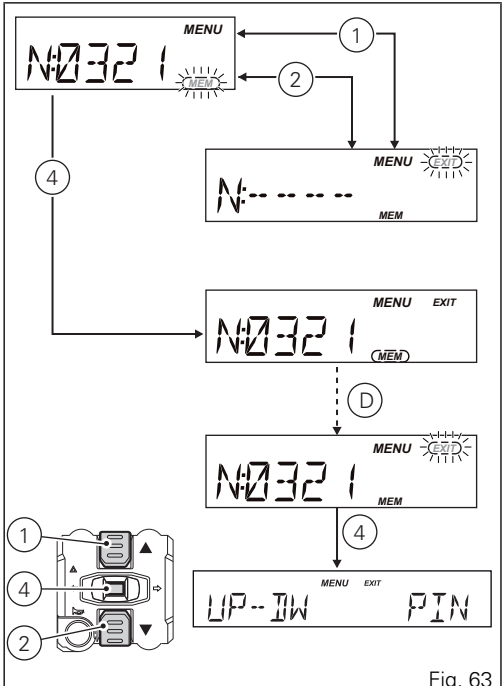

Fig. 63

Engine rpm digital indication (RPM)

This function displays the number of RPM in digital format (recommended for improved accuracy when setting idle rpm).
Enter the SETTING MENU. Select "RPM" option, by pressing button (1) or (2).
Once function is highlighted, press CONFIRM MENU button (4).
The instrument panel displays the engine rpm in the bottom left digits, in MENU 1.
The upper rev counter scale continues to indicate the engine rpm.
The instrument panel shows the numerical value of the engine rpm with a precision of 50 rpm.
To quit, press button (4).

Note

If the information is not available, the dashes " - - - - - " and the rev counter scale start flashing.

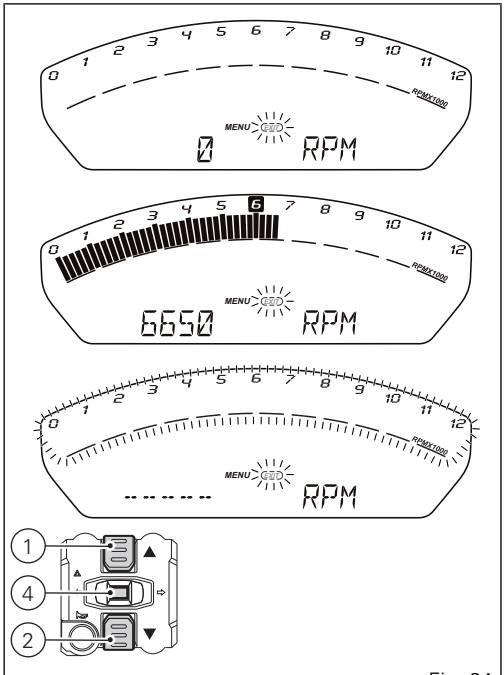

Fig. 64

Setting the units of measurement

This function allows changing the units of measurement of the displayed values.
To manually set the units of measurement, you must enter the SETTING MENU.
Select "UNT" option, by pressing button (1) or (2).
Once function is highlighted, press CONFIRM MENU button (4).

When entering this function, use buttons (1) and (2) to select the parameter for which you want to set a new unit of measurement or to restore the default settings:

- SPEED;
- temperature (TEMP.);
- fuel consumption (CONS.).

Besides the settings that can be modified, it is possible to select the "DEFAULT" box to restore the default units of measurement.

Note

The "UNT:DF" indication is only active if no unit of measurement has been modified and therefore, the instrument panel uses the units of measurement set by default.

To exit the menu and go back to previous page, select "EXIT" and press button (4).

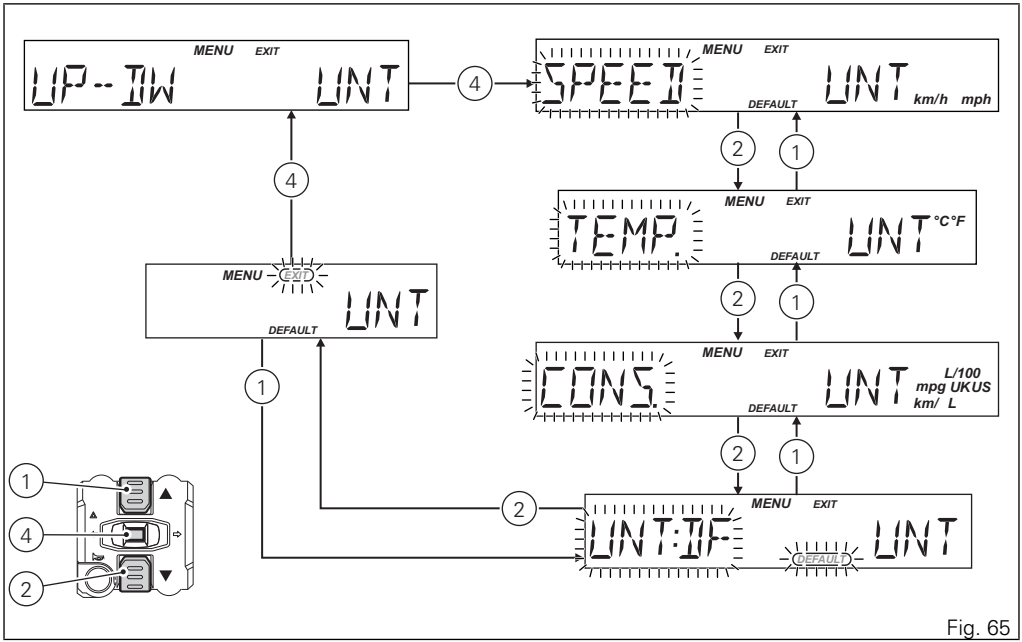
MENU EXIT
UP-DW UNT
4
MENU EXIT
SPEED UNT km/h mph
DEFAULT
2
1
MENU EXIT
TEMP. UNT °C°F
DEFAULT
2
1
MENU EXIT
CONS. UNT L/100 mpg UKUS km/ L
DEFAULT
2
1
MENU EXIT
UNT:DF- UNT
DEFAULT
4
MENU EXIT
UNT
DEFAULT
1
2
1
4
2

Fig. 65

Setting the units of measurement: Speed

This function allows changing the unit of measurement of Vehicle speed, Odometer, Trip A, Trip B, Trip Fuel (when active) and Average speed. To gain access to this function enter the SETTING MENU, use buttons (1) and (2) to select UNT and press button (4). Select SPEED option, by pressing button (1) or (2).
Once SPEED function (A) is highlighted, press CONFIRM MENU button (4). When you enter the function, the current unit of measurement is displayed flashing, followed by the list of the possible units steady ON: km/h, mph. Press buttons (1) and (2) to highlight the units of measurement one by one: in particular, use button (1) to highlight the following item and button (2) to highlight the previous item. Select the required unit of measurement and then press the CONFIRM MENU button (4) to confirm the selected unit; then the selected unit of measurement is saved in the instrument panel and the SPEED indication starts flashing again.

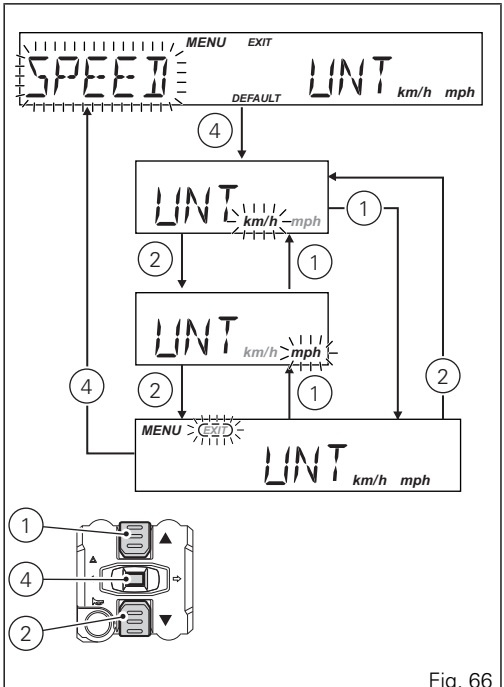

Fig. 66

Press button (1) to make the EXIT box flash; press button (4) to quit and go back to the previous window.

- Km/h: if this unit is set, the following values will have the same units of measurement:
  1) TOT, TRIP A, TRIP B, TRIP FUEL: Km
  2) Vehicle speed and SPEED AVG: Km/h
- mph: if this unit is set, the following values will have the same units of measurement:
  1) TOT, TRIP1, TRIP2, TRIP FUEL: miles
  2) Vehicle speed and SPEED AVG: mph

Setting the units of measurement: Temperature

This function allows changing the unit of measurement of the engine coolant temperature and the Air Temperature.
To gain access to this function enter the SETTING MENU, use buttons (1) and (2) to select UNT and press button (4).
Select TEMP option, by pressing button (1) or (2).
After selecting the TEMP. function (B), press CONFIRM MENU button (4).
When you enter the function, the current unit of measurement is displayed flashing, followed by the list of the possible units steady ON: °C, °F.
Press buttons (1) and (2) to highlight the units of measurement one by one: in particular, use button (1) to highlight the following item and button (2) to highlight the previous item. Select the required unit of measurement and then press the CONFIRM MENU button (4) to confirm the selected unit; then the selected unit of measurement is saved in the instrument panel and the "TEMP." indication starts flashing again.

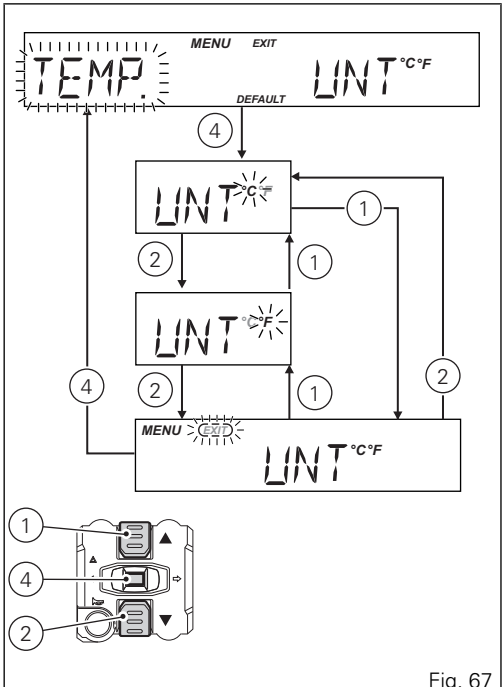

Fig. 67

Press button (1) to make the EXIT box flash; press button (4) to quit and go back to the previous window.

- °C: if this unit is set, the following values will have the same units of measurement:
  1) Engine coolant temperature and T_AIR: °C
- °F: if this unit is set, the following values will have the same units of measurement:
  1) Engine coolant temperature and T_AIR: °F

Setting the units of measurement: Fuel consumption

This function allows changing the units of measurement of the Average and Instant Fuel Consumption.
To gain access to this function enter the SETTING MENU, use buttons (1) and (2) to select UNT and press button (4).
Select CONS. option, by pressing button (1) or (2).
After selecting the CONS. function (C), press CONFIRM MENU button (4). When you enter the function, the current unit of measurement is displayed, followed by the list of the possible units: L / 100km, km / L, mpg (UK), mpg (USA).
Press buttons (1) and (2) to highlight the units of measurement one by one: use button (1) to highlight the following item and button (2) to highlight the previous item.
Select the required unit of measurement and then press the CONFIRM MENU button (4) to confirm the selected unit; then the selected unit of measurement is saved in the instrument panel and the "CONS." indication starts flashing again.

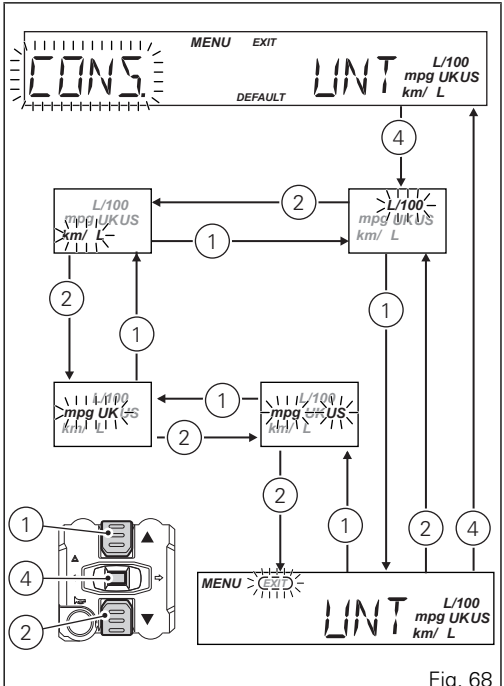

Fig. 68

Press button (1) to make the EXIT box flash; press button (4) to quit and go back to the previous window.

- Km/l: if this unit is set, the following values will have the same units of measurement:
  1) CONS. and CONS AVG: Km/l
- l/100: if this unit is set, the following values will have the same units of measurement:
  1) CONS. and CONS AVG: l/100
- UK MPG: if this unit is set, the following values will have the same units of measurement:
  1) CONS. and CONS AVG: UK mpgal
- USA MPG: if this unit is set, the following values will have the same units of measurement:
  1) CONS. and CONS AVG: USA MPG

DEFAULT setting

This function allows setting the DEFAULT units of measurement according to the vehicle version.
To gain access to this function enter the SETTING MENU, use buttons (1) and (2) to select UNT and press button (4). Press button (1) or (2) to make the "DEFAULT" box start flashing and then press button (4) for 2 seconds.
After 2 seconds the instrument panel shows "WAIT" for 2 seconds; then the "DF-OK" message indicates that the units of measurement have been restored.

Note

When the current settings are the default ones, on the "DEFAULT" indication left side the display shows "UNT:DF".

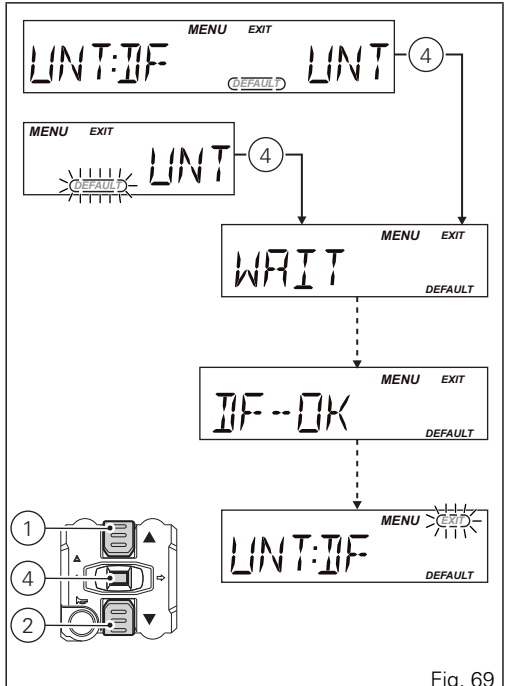

Fig. 69

Chart of the units of measurement

	TOT TRIP A TRIP B TRIP FUEL	**SPEED AVERAGE SPEED**	**T_ENGINE T_AIR**	**INSTANTANEOUS FUEL CONSUMP-TION AVERAGE FUEL CONSUMPTION**
Europe	km	km/h	°C	l/100km
UK	miles	mph	°C	mpg UK
USA	miles	mph	°F	mpg USA
Canada	km	km/h	°C	l/100km
France	km	km/h	°C	l/100km
Japan	km	km/h	°C	l/100km
Brazil	km	km/h	°C	l/100km
Taiwan	km	km/h	°C	l/100km
China	km	km/h	°C	l/100km

Light control

Low / High beam

This function allows you to reduce current consumption from the battery, by managing headlight switching-on and off.
At Key-ON, the high beam and low beam lights are OFF, only the parking lights are turned on.
Once the engine is started, the low beam is turned on; with engine running the standard operation of the lights is restored: it is possible to switch on and OFF the high beam using button (1) in position (A), or FLASH using button (1) in position (B). If the engine is not started after Key-ON, it is still possible to turn on the low/high beam by pressing button (1) in position (A) on the left switch; press it once to turn on the low beam; any further time you press it you switch between low and high beam.

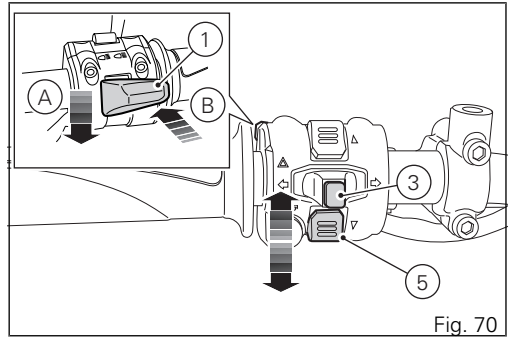

Fig. 70

If engine is not started within 60 seconds since the button was first pressed, the low and high beam lights are turned OFF.
If the low beam or high beam was turned on before starting the engine (with the procedure described above), the headlight turns off automatically when starting the engine and will turn ON again when the engine has been completely started to save the battery charge.

Turn indicators

Turn indicators are automatically controlled by the instrument panel.
After activating one of the two turn indicators, user can reset them using the button (3, Fig. 70) on the left switch.
If the turn indicator is not reset manually, the instrument panel will automatically switch it off after the motorcycle has travelled 500 m (0.3 miles) from when the turn indicator was activated. The counter for the distance travelled for automatic deactivation is only activated at speeds below 80 km/h (50 mph).
If the calculation of the distance for automatic deactivation is activated and then the motorcycle exceeds a speed of 80 km/h (50 mph), the calculation is interrupted and will restart when the speed returns below the indicated threshold.

Hazard function

The "Hazard" function turns all four turn indicators on at the same time to signal an emergency condition. The "Hazard" function is activated by taking button (3) to position (6) for 3 seconds. Activation is only possible when motorcycle is ON (i.e. when key is turned to "ON" while engine status does not matter). When the "Hazard" function is active, all four turn indicators blink at the same time as well as warning lights (7) on the instrument panel. The "Hazard" function can be disabled both with motorcycle on (key set to "ON") - by taking button (3) to position (6) or by taking button (3) to its central position - and with motorcycle off (key set to OFF) by taking button (3) to position (6).

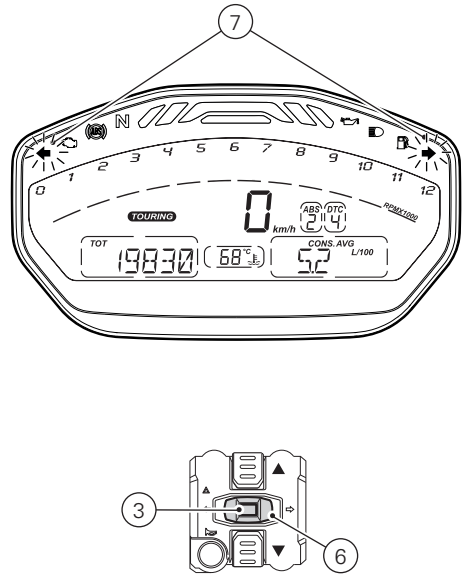

Fig. 71

After activating the "Hazard" function, if motorcycle is switched OFF (key set to OFF), the function stays active until manually disabled by user or it is automatically disabled after 120 minutes (2 hours) to save battery charge.

The Immobilizer system

To further improve the anti-theft protection, the motorcycle is equipped with an engine electronic block system (IMMOBILIZER) that is automatically activated every time the instrument panel is switched off.
Inside of each key handgrip there is an electronic device that modulates the signal sent by a special antenna integrated in the ignition switch upon starting.
Such modulated signal represents the "password", that changes upon every starting, that allows the control unit to acknowledge the key and thus starting the engine.

Keys

The motorcycle comes with 2 keys.
They contain the "Immobilizer system code".
Keys (B) are those for the standard use, i.e. to:

- start the engine;
- open the fuel tank plug;
- open the seat lock.

Warning

Separate the keys and use only one of the two to ride the bike.

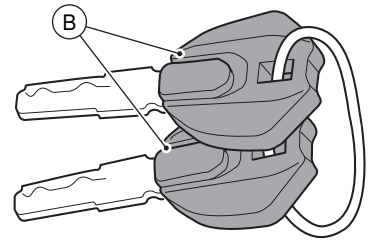

Fig. 72

Operation

Every time you turn the key from ON to OFF, the protection system activates the engine block.
If also in this case you are not able to start the engine, contact an authorised Ducati service centre.

Warning

Strong impacts could damage the electronic components inside the key. During the procedure always use the same key. Using different keys may prevent the system from acknowledging the code of the inserted key.

Duplicate keys

When a customer needs spare keys, he/she shall contact a Ducati authorised service centre and bring all keys he/she still has.
The Ducati authorised service centre will programme all new and old keys.
The Ducati authorised service centre may ask to the customer to prove to be the motorcycle owner.
The codes of the keys missing during the programming procedure will be erased to ensure that any lost key can not start the engine.

Note

If the motorcycle owner changes, it is necessary that the new owner is given all keys.

Restoring motorcycle operation via the PIN CODE

In case of key acknowledgement system or key malfunction, the instrument panel allows the user to enter his/her own PIN code to temporarily restore motorcycle operation.
If upon key-on an Immobilizer ERROR occurs, the instrument panel automatically activates in MENU 1 the possibility to enter the four-digit PIN CODE previously memorised with the relevant function in the Setting Menu, PIN page.

Entering the code (A):

1) Press button (2) or (1), only one digit indicating "0" starts flashing;
2) Each time you press the button (2) the displayed number increases by one (+ 1) up to "9" and then starts back from "0";
3) Each time you press the button (1) the displayed number decreases by one (- 1) up to "1" and then starts back from "0";
4) To confirm the number, press the button (4);

Repeat the procedures until you confirm all the digits of the PIN CODE.

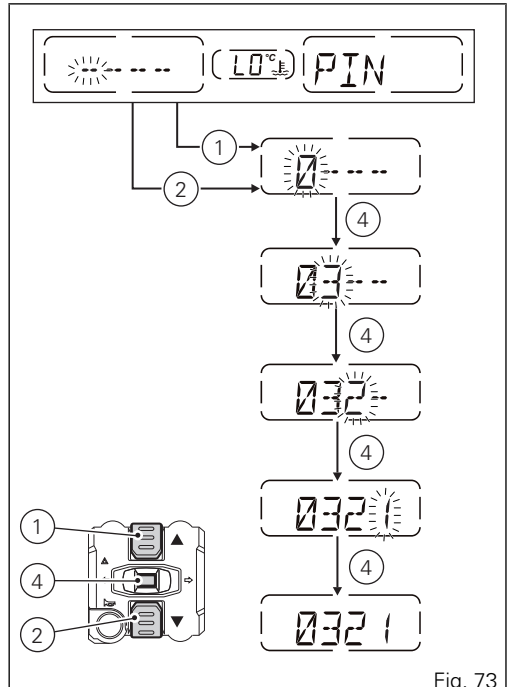

Fig. 73

When you press button (4) to confirm the fourth and last digit:

- if the PIN code (A) is correct, the instrument panel shows the message OK for 2 seconds followed by the "standard screen" and enables the vehicle start (C);
- if the PIN code (B) is not correct, the instrument panel displays WRONG for 2 seconds and then highlights the string of four dashes "- - - -" to allow you to try again. The number of possible attempts is unlimited and determined by a preset time-out of 2 minutes. After 2 minutes, the instrument panel shows the standard screen and does not allow the vehicle start (D).

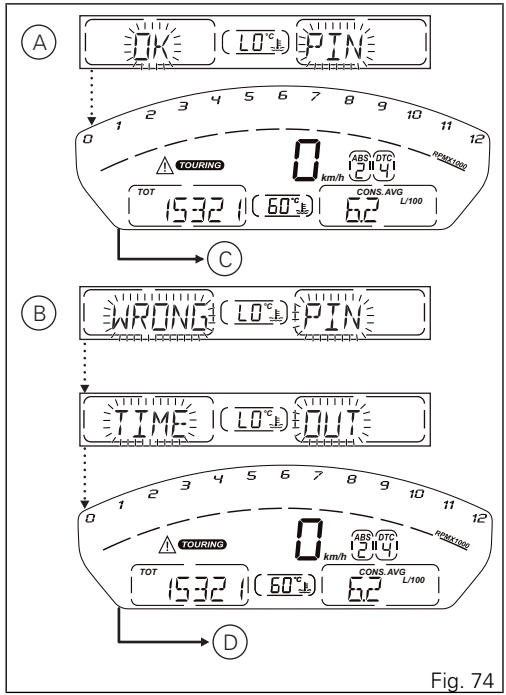

Fig. 74

Important

If this procedure is necessary in order to start the motorcycle, contact an Authorised Ducati Service Centre as soon as possible to fix the problem.

Note

The vehicle can be started until a Key-Off is performed. If the problem still persists upon the next starting attempt, repeat the procedure from the beginning in order to start the motorcycle temporarily again.

Controls

Position of motorcycle controls

Warning
This section shows the position and function of the controls used to ride the motorcycle. Be sure to read this information carefully before you use the controls.

1) Instrument panel.
2) Key-operated ignition switch and steering lock.
3) Left switch.
4) Clutch lever.
5) Right switch.
6) Throttle twistgrip.
7) Front brake lever.
8) Gear change pedal.
9) Rear brake pedal.

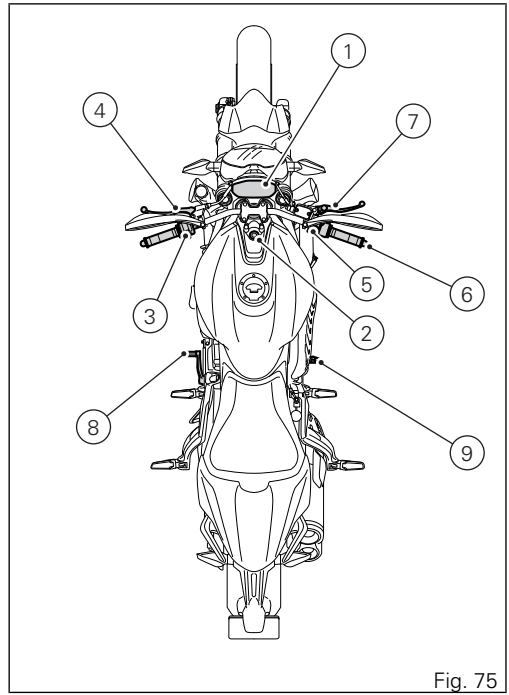

Fig. 75

Key-operated ignition switch and steering lock

It is located in front of the fuel tank and has four positions:

A) ON: enables lights and engine operation;
B) OFF: disables lights and engine operation;
C) LOCK: the steering is locked;
D) P: parking light and steering lock.

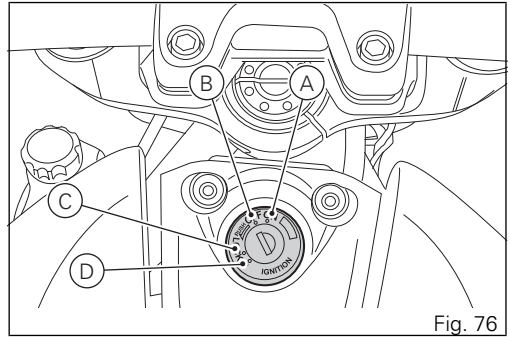

Fig. 76

Note

To move the key to the last two positions, press it down before turning it. The key can be removed in positions (B), (C) and (D).

Left-hand switch

1) Dip switch, two-position light selector switch:
   position = low beam ON (A);
   position = high beam ON (B);
   position = high beam (FLASH) and instrument panel control (C).
2) Switch = 3-position turn indicator control:
   centre position = OFF;
   position = left turn;
   position = right turn.
   To disable the turn indicator, press the control once it returns to centre position.
3) Button = warning horn.
4) Instrument panel control switch, position " ▲ ".
5) Instrument panel control switch, position " ▼ ".

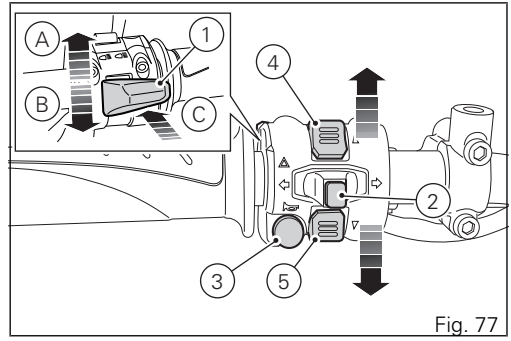

Fig. 77

Clutch lever

Lever (1) disengages the clutch. When clutch lever (1) is operated, drive from the engine to the gearbox and the drive wheel is disengaged. Using the clutch properly is essential to smooth riding, especially when moving OFF.

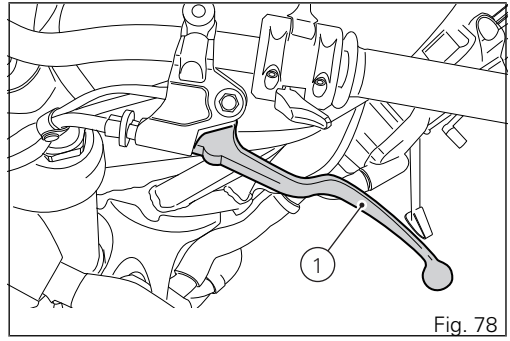

Fig. 78

Important

Using the clutch properly will avoid damage to transmission parts and spare the engine.

Note

The engine can be started with the side stand down and the gearbox in neutral. If starting with a gear engaged, pull in the clutch lever (in this case the side stand must be up).

Clutch control free play adjustment

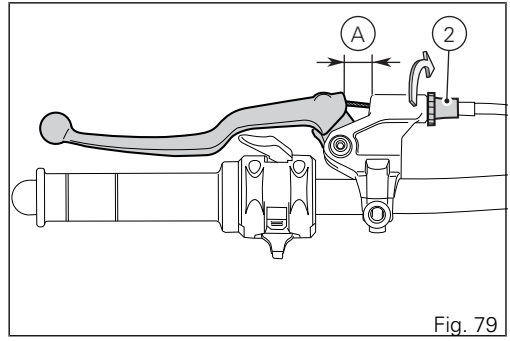

Fig. 79

Warning
A wrong adjustment can seriously affect the clutch operation and service life.

A worn clutch tensions the clutch cable.
Always check the free play, with cold engine, before using the vehicle.
When operating the clutch lever, you must clearly feel the passage from a very low resistance to a very high resistance (operating force).
The free play corresponds to the lever travel where the clutch resistance force is very low.
Operate the lever for its free play and check that distance "A" is between 3 - 4 mm.
To adjust the free play make sure that it is not equal to zero. Work on the primary adjuster (2) near the clutch control.

Adjuster (2), located on the lever, allows a maximum adjustment (Q) of 11 mm, whereas the standard adjustment (starting one) is of 5 mm. If working on such adjuster proves insufficient, work on the secondary adjuster (3).

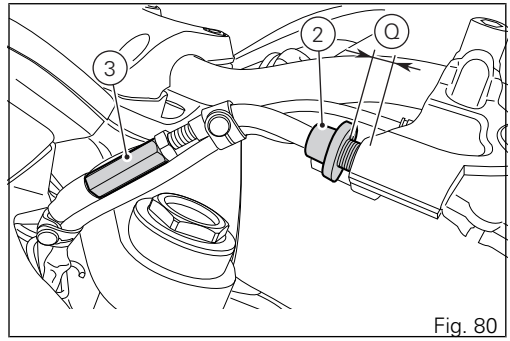

Fig. 80

Warning

In case of a slipping clutch due to clutch wear, adjuster (2) on the lever must NEVER be loosened, but screwed, as described above.
If the clutch is still slipping, go to a Dealer or a Ducati authorised service centre.

Right-hand switch

1) Red ON/OFF switch.
2) Black ENGINE START button.

The switch (1) has three positions:

A) centre: RUN OFF. In this position, the engine cannot be started and all electronic devices are OFF.
B) pushed down: ON/OFF. In this position, the system can be turned ON (Key-ON) and OFF (Key-OFF).
C) pushed up: RUN ON. The engine can only be started in this position, pushing the black button (2).

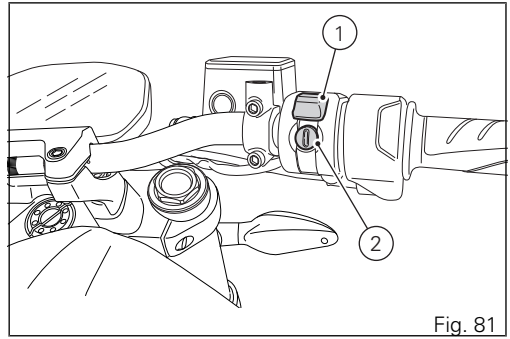

Fig. 81

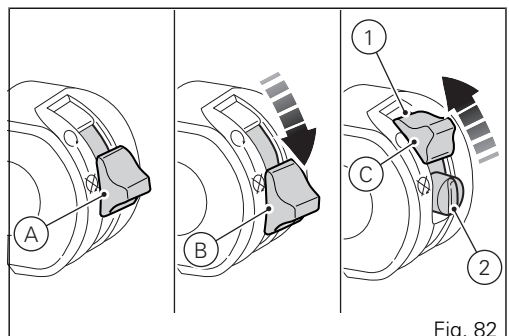

Fig. 82

Throttle twistgrip

The twistgrip (1) on the right handlebar opens the throttles.
When released, it will spring back to the initial position (idling speed).

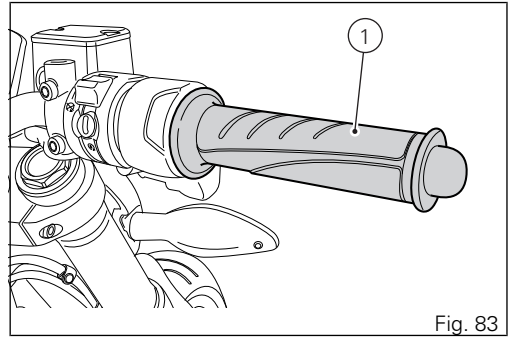

Fig. 83

Front brake lever

Pull in the lever (1) towards the twistgrip to operate the front brake. The system is hydraulically operated and you just need to pull the lever gently.
The brake lever has a wheel (2) for adjusting the distance between lever and twistgrip on the handlebar. To adjust it, keep lever (1) fully extended, and turn knob (2), turning it in correspondence of one of the four foreseen positions. Keep in mind that the position no. 1 corresponds to the maximum distance between the lever and the knob, whereas position no. 4 corresponds to the minimum distance.

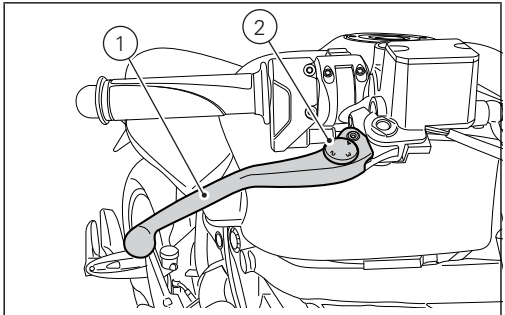

Fig. 84

Warning

Before using these controls, thoroughly read instructions under "Moving off".

Warning

Set front brake lever when motorcycle is stopped.

Rear brake pedal

Press pedal (1) down with your foot to operate the rear brake.
The control system is of the hydraulic type.

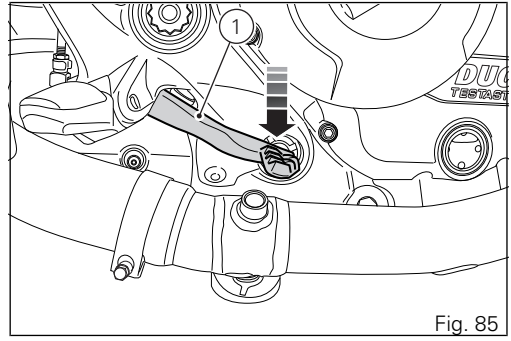

Fig. 85

Gear change pedal

The gear change pedal can move in the following two directions and, when released, it automatically returns to rest position N in the centre:

- down = press down the pedal to engage the 1st gear and to shift down. The N light on the instrument panel will go out.
- upwards= lift the pedal to engage 2nd gear and then 3rd, 4th, 5th and 6th gears.

Each time you move the pedal you will engage the next gear.

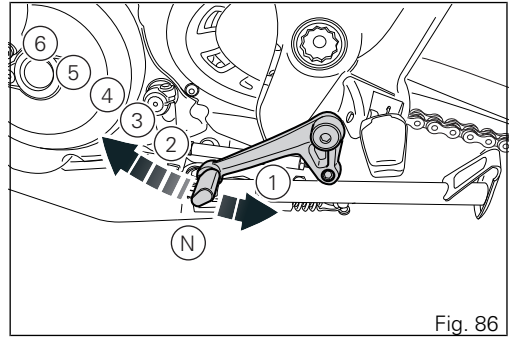

Fig. 86

Adjusting the position of the gearchange and rear brake pedals

Gear change pedal

The position of the gearchange and rear brake levers in relation to the footpegs can be adjusted to suit the requirements of the rider.
To adjust the position of the gearchange lever, proceed as follows: hold the linkage (1) and slacken the lock nuts (2) and (3).

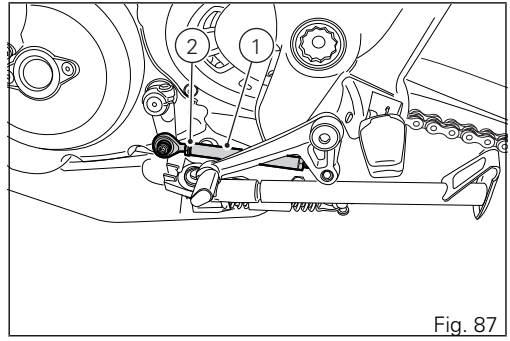

Fig. 87

Note

Nut (2) has a left-hand thread.

Fit an open-end wrench to hexagonal element of linkage (1) and rotate until setting pedal in the desired position. Tighten both lock nuts onto linkage.

Rear brake pedal

To adjust the position of the rear brake pedal, loosen lock nut (4), turn pedal stroke adjuster screw (5) until obtaining the required position. Tighten the lock nut (4).
Operate the pedal by hand to check that there is 1.5 to 2 mm of free play before the brake bites.
If not, adjust the length of the master cylinder control rod as follows.
Loosen lock nut (6) on master cylinder rod.
Tighten rod on fork (7) to increase clearance or loosen it to decrease it.
Tighten lock nut (6) and check again clearance.

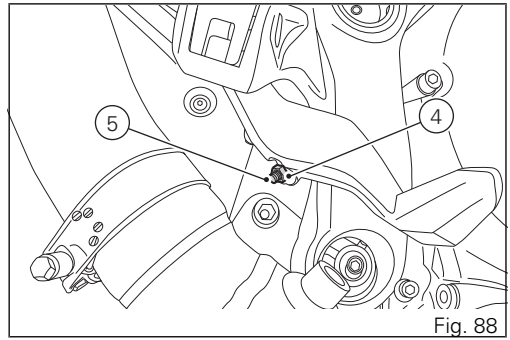

Fig. 88

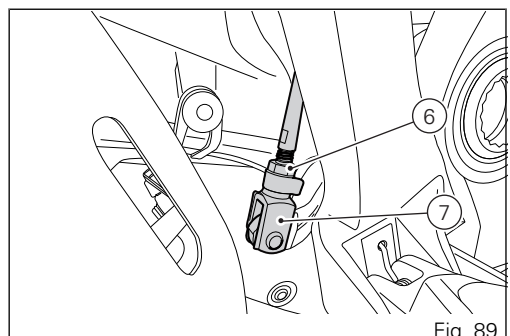

Fig. 89

Main components and devices

Position on the vehicle

1) Tank filler plug.
2) Seat lock.
3) Helmet cable fastening pin.
4) Side stand.
5) Rear-view mirrors.
6) Rear shock absorber adjusters.
7) Catalytic converter.
8) Exhaust silencer.

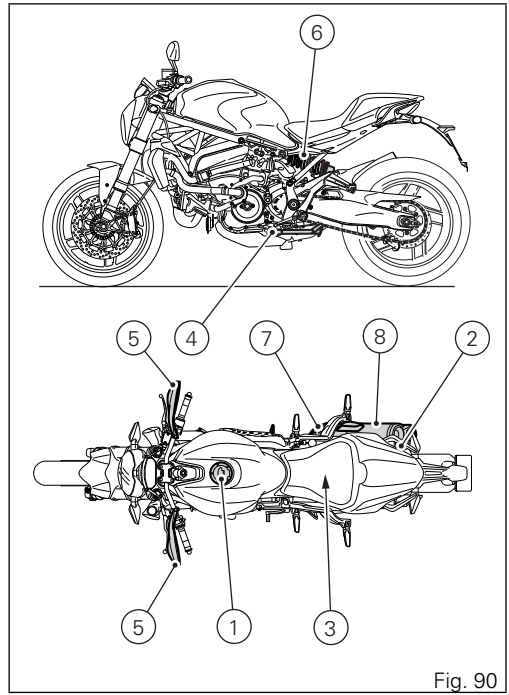

Fig. 90

Tank filler plug

OPENING

Lift flap (1) and insert the key in the lock. Turn the key clockwise by 1/4 of a turn to release the lock.

CLOSING

Close the plug with key inserted and press to fit in place. Turn the key counter clockwise to the original position and remove it. Close flap (1).

Note
Plug can only be closed when key is inserted.

Warning
After refuelling, always make sure that the plug is perfectly in place and closed.

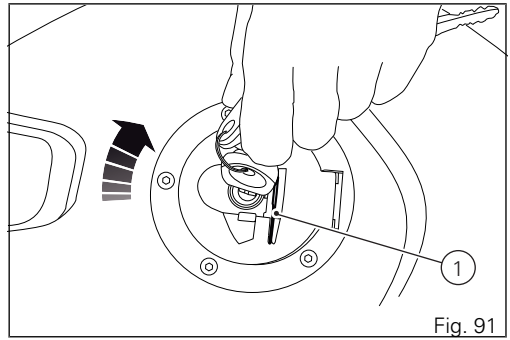

Fig. 91

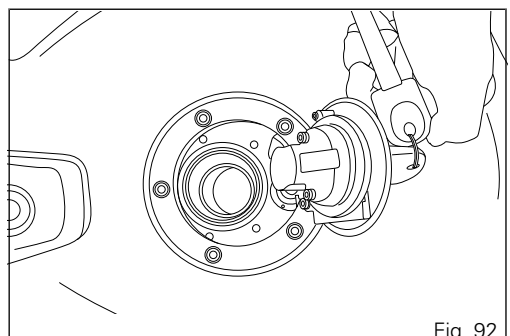
Fig. 92

Seat lock

OPENING

Insert the key in lock (1), turn clockwise while pressing down at the latch to help release the pin. Remove the seat (2) pulling it backwards until sliding it out of the front retainers.

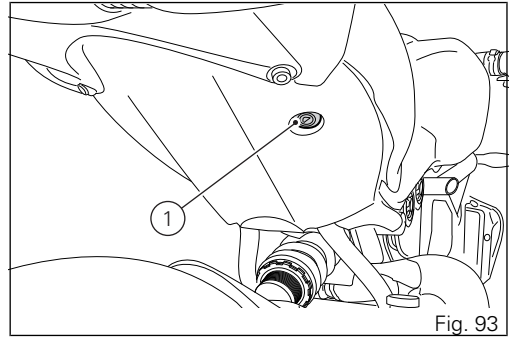

Fig. 93

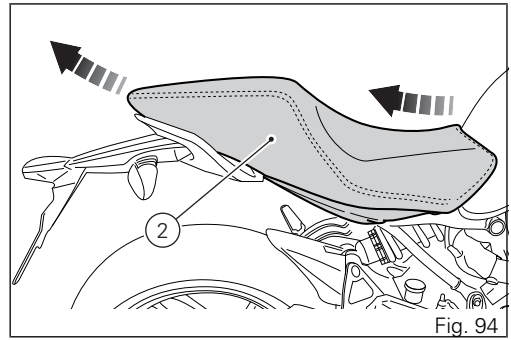

Fig. 94

CLOSING

Make sure that all elements are correctly positioned and fastened to the compartment under the seat (2). Engage seat bottom front ends into pins (A) and (B) on the support fastened to rear subframe. Keep the rear part lifted, insert and push on the central fastener of the seat: push the seat rear end until you hear the latch clicking. Make sure the seat is safely secured to the frame and remove the key from the lock.

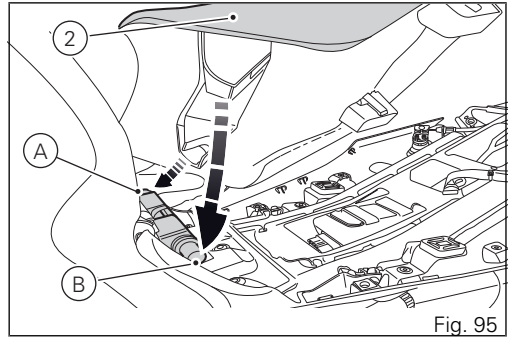

Fig. 95

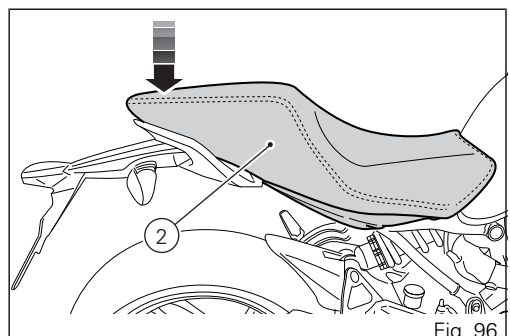

Fig. 96

Seat height adjustment

The motorcycle is sold with raised seat. Seat height can be lowered.
To lower the seat (1), remove it together with the relevant cover.
Loosen the four screws (2) and remove the two covers (3) under the seat.

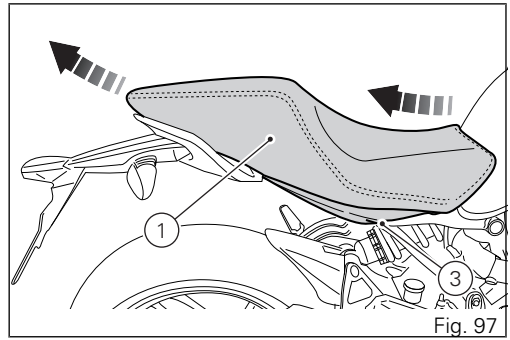

Fig. 97

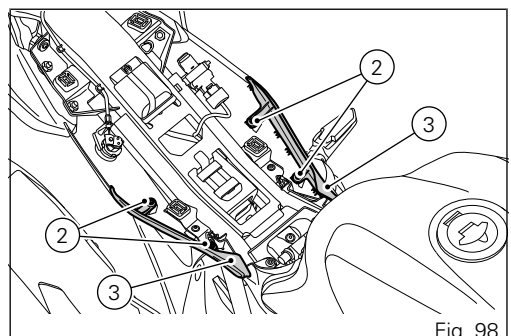

Fig. 98

Remove the four blocks (4) located under the seat (1). Position hook (5) with elastic band in the bottom retainer.

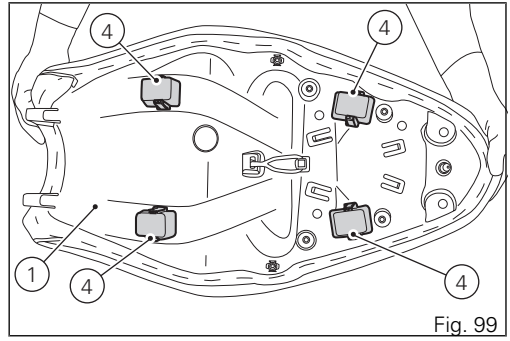

Fig. 99

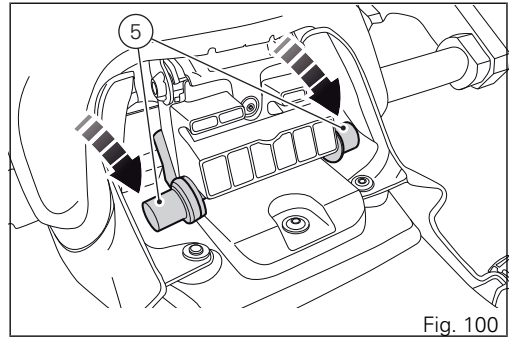

Fig. 100

Fit the seat with its cover on the motorcycle. Now the seat is in a lowered position.

To raise the seat (1), remove it together with the relevant cover.
Fit the four blocks (4) in their housing under seat (1).

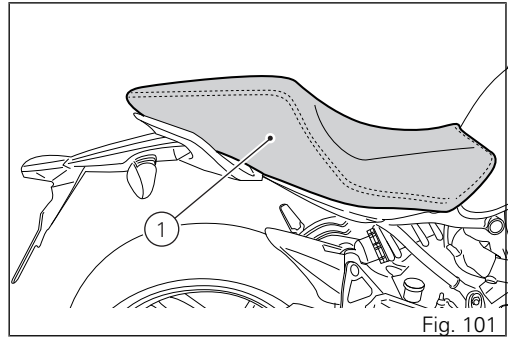

Fig. 101

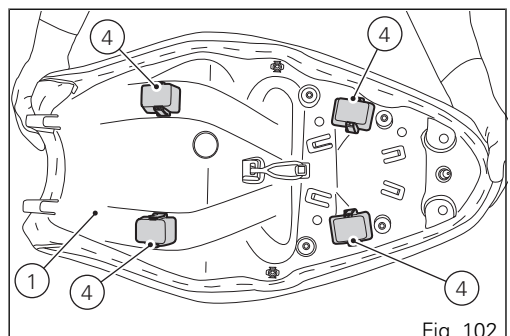

Fig. 102

Make sure clips (6) are in place.
Position the two covers (3) under the seat, by correctly inserting the tabs (L) on cover (3) into the slots on underseat cover.
Tighten the four retaining screws (2).

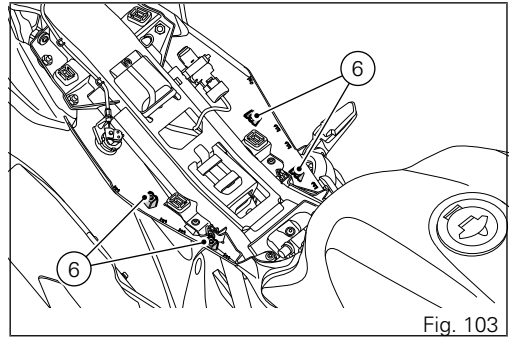

Fig. 103

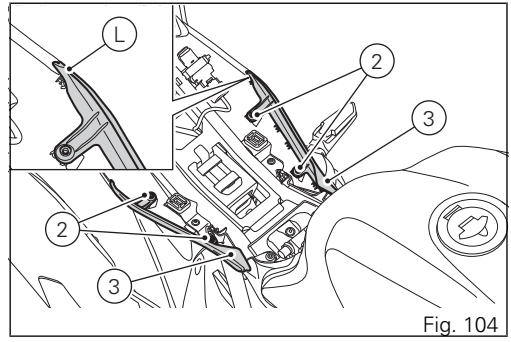

Fig. 104

Position hook (5) with elastic band in the top retainer.
Refit the seat with its cover on the motorcycle.

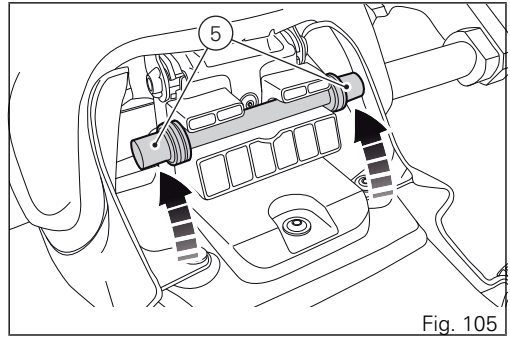

Fig. 105

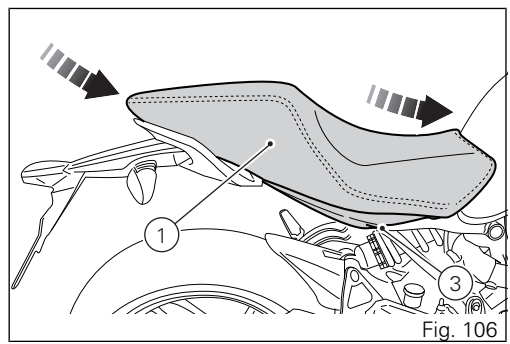

Fig. 106

Helmet holder cable

The helmet cable (1) is inside the tool box, refer to “Tool kit and accessories” page 191. Route cable through helmet and engage cable end into pin (2). Leave the helmet hanging and refit the seat to hold it in place.

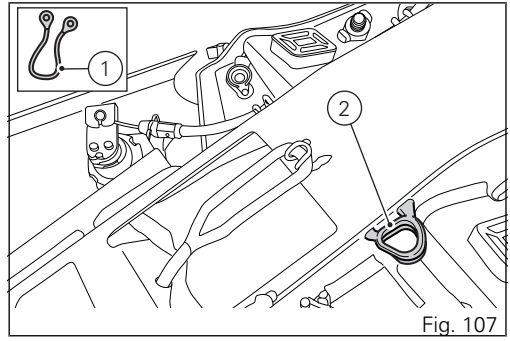

Fig. 107

Warning

This device protects the helmet against theft when the motorcycle is parked. Do not leave the helmet attached when riding the motorcycle; it could interfere with your movements and cause loss of control of the motorcycle.

Side stand

Warning
Before lowering the side stand, make sure that the bearing surface is hard and flat.

Do not park on soft or pebbled ground or on asphalt melt by the sun heat and similar or the motorcycle may fall over.
When parking in downhill road tracts, always park the motorcycle with its rear wheel facing downhill. To pull down the side stand, hold the motorcycle handlebars with both hands and push down on the side stand (1) with your foot until it is fully extended. Tilt the motorcycle until the side stand is resting on the ground.

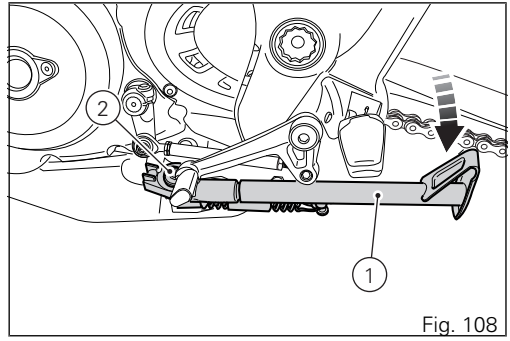

Fig. 108

Warning
Do not sit on the motorcycle when it is supported on the side stand.

To move the side stand to its rest position (horizontal position), lean the motorcycle to the right while lifting the stand (1) with your foot.

Note

Check for proper operation of the stand mechanism (two springs, one into the other) and the safety sensor (2) at regular intervals.

Note

The engine can be started with the side stand down and the gearbox in neutral. If starting with a gear engaged, pull in the clutch lever (in this case the side stand must be up).

Front fork adjusters

Monster 821 Stripe

The front fork used on this motorcycle has rebound (return), compression and spring preload adjustment. It is possible to adjust the spring preload on both legs whereas compression and rebound can only be adjusted on the RH leg.

Adjustment is done by external screw adjusters:

1) for rebound adjustment;
2) for inner spring preload adjustment;
3) for compression adjustment.

Put the motorcycle on the side stand and make sure it is stable. Turn adjuster (1) at the top end of the RH fork leg with a flat-blade screwdriver to adjust rebound. Turn adjuster (3) on the RH fork leg bottom end with a flat-blade screwdriver to adjust compression. To change preload of the spring inside each fork leg, turn the hex. adjuster (2), with a 14 mm hexagon wrench.

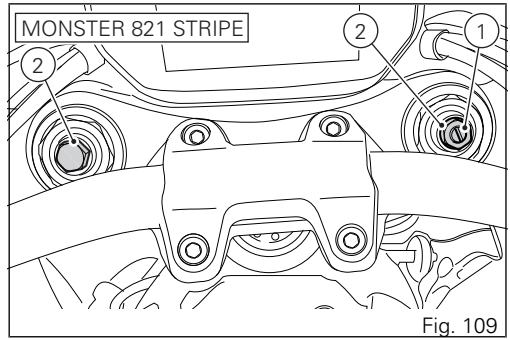

Fig. 109

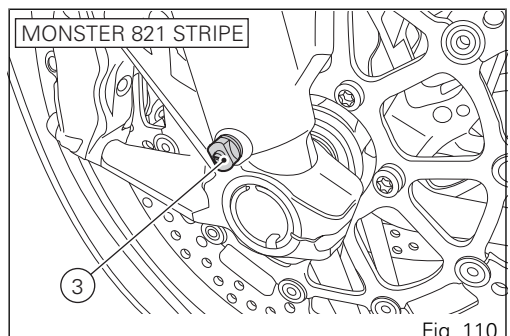

Fig. 110

By turning adjusters (1) and (3) you will hear some clicks; each click corresponds to a damping setting. The stiffest damping setting is obtained with the adjuster turned fully clockwise to the “0” position. By turning counter clockwise starting from this position, count the clicks that will correspond to positions “1”, “2” etc..

STANDARD settings are as follows:

- compression: 11 clicks (from fully closed position);
- rebound: 7 clicks (from fully closed position);
- Spring preload: 5 turns (from fully uncompressed).

Warning

Adjust both fork leg spring preload to same settings.

Rear shock absorber adjusters
Monster 821 / 821 Dark / 821 Stripe

The rear shock absorber has external adjusters that enable you to adjust the setting to suit the load on the motorcycle.
The adjuster (1) located on the left side, on the upper connection holding the shock absorber to the engine, adjusts the damping during the rebound phase (return).
Turn adjuster (1) clockwise to stiffen the damping, or counter clockwise to soften it.
Ring nuts (2) and (3), located in the shock absorber lower side, adjust the external spring preload.
To change spring preload, slacken the lower locking ring nut (3). Then TIGHTEN or SLACKEN the upper ring nut (2) to INCREASE or DECREASE spring preload.
After setting spring preload as desired, tighten the lower locking ring nut (3).

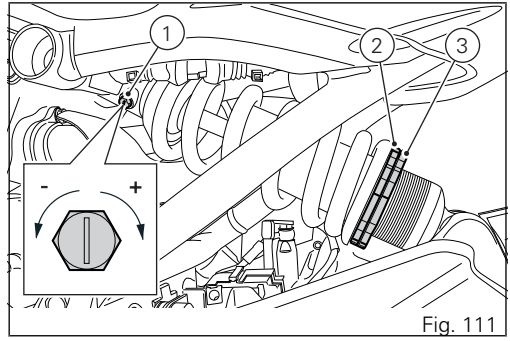

Fig. 111

STANDARD setting from the fully closed position (clockwise):

- rebound: loosen adjuster (1) by 1.5 turns (from fully closed position);
- Spring preload: 15 mm (from fully uncompressed).

Warning

To turn the preload adjuster ring nut use a pin wrench. Pay attention to avoid hand injuries by hitting motorcycle parts in case the wrench tooth suddenly slips on the ring nut groove while moving it.

Warning

The shock absorber is filled with gas under pressure and may cause severe damage if taken apart by unskilled persons.

SETTING THE SUSPENSIONS

The values in the table are indicative. They have been calculated considering a dressed rider weighing 80–90 kg and a dressed passenger weighing 70–80 kg.

Front fork adjustments - Monster 821 Stripe					
Parameter	**Range**	**Standard**	**Sport**	**Comfort**	**Rider + passenger**
Compression	0 ÷ 16 clicks	11 clicks	3 clicks	14 clicks	11 clicks
Rebound	0 ÷ 16 clicks	7 clicks	5 clicks	12 clicks	5 clicks
Spring preload	0 ÷ 10 turns	5 turns	5 turns	5 turns	8 turns

Rear shock absorber adjustments - Monster 821 Stripe					
Parameter	**Range**	**Standard**	**Sport**	**Comfort**	**Rider + passenger**
Compression	—	—	—	—	—
Rebound	0 ÷ 3 turns	1.5 turns	1 turns	3 turns	1.5 turns
Spring preload	10 ÷ 20 mm	15 mm	15 mm	15 mm	19 mm

Rear shock absorber adjustments - Monster 821 / 821 Dark					
Parameter	**Range**	**Default**	**Sport**	**Comfort**	**Rider + passen-ger**
Compression	–	–	–	–	–
Rebound	0 ÷ 5 turns	1.5 turns	0.5 turns	2.5 turns	1.5 turns
Spring preload	10 ÷ 20 mm	15 mm	15 mm	15 mm	19 mm

Riding the motorcycle

Running-in recommendations

Important

Before using the motorcycle, check for no labels on the rear-view mirrors; otherwise remove them.

Maximum rotation speed

Rotation speed for running-in period and during standard use (rpm):

1) up to 1,000 km;
2) from 1,000 to 2,500 km.

Up to 1,000 km

During the first 1000 km, keep an eye on the rev counter. It should never exceed: 5,500÷6,000 rpm. During the first hours of riding, it is advisable to run the engine at varying load and rpm, though still within recommended limit.

To this end, roads with plenty of bends and even slightly hilly areas are ideal for a most efficient running-in of engine, brakes and suspensions.
For the first 100 km use the brakes gently. Avoid sudden or prolonged braking. This will allow the friction material on the brake pads to bed in against the brake discs.
For all mechanical parts of the motorcycle to adapt to one another and above all not to adversely affect the life of basic engine parts, it is advisable to avoid harsh accelerations and not to run the engine at high rpm for too long, especially uphill.
Furthermore, the drive chain should be inspected frequently. Lubricate as required.

From 1,000 to 2,500 km

At this point, you can squeeze some more power out of your engine. However never exceed 7,000 rpm.

Important

During the whole running-in period, the maintenance and service rules recommended in the Warranty Card should be observed carefully. Failure to follow these instructions releases Ducati Motor Holding S.p.A. from any liability whatsoever for any engine damage or shorter engine life.

Strict observance of running-in recommendations will ensure longer engine life and reduce the likelihood of overhauls and tune-ups.

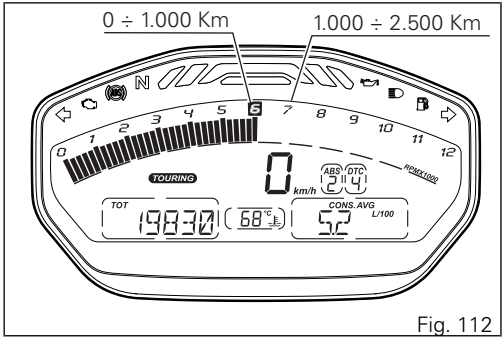

Fig. 112

Pre-ride checks

Warning
Failure to carry out these checks before riding, may lead to motorcycle damage and injury to rider and passenger.

Before riding, perform a thorough check-up on your motorcycle as follows:

- FUEL LEVEL IN THE TANK
  Check the fuel level in the tank. Fill tank if needed (page 189).
- ENGINE OIL LEVEL
  Check oil level in the sump through the sight glass. Top up if needed (page 223).
- BRAKE FLUID
  Check fluid level in the relevant reservoirs (page 194).
- COOLANT
  Check coolant level in the expansion reservoir. Top up if needed (page 192).
- TYRE CONDITION
  Check tyre pressure and condition (page 220).
- CONTROLS
  Work the brake, clutch, throttle and gear change controls (levers, pedals and twistgrip) and check for proper operation.
- LIGHTS AND INDICATORS
  Make sure lights, indicators and horn work properly. Replace any burnt-out bulbs (page 217).
- KEY LOCKS
  Ensure that tank filler plug (page 161) and seat (page 162) are properly locked.
- STAND
  Make sure side stand operates smoothly and is in the correct position (page 170).

ABS LIGHT

After Key-ON, the ABS light (9, Fig. 3) stays ON when the motorcycle speed exceeds 5 km/h; the warning light switches OFF to indicate the correct operation of the ABS system.

Warning

In case of malfunction, do not ride the motorcycle and contact a Ducati Dealer or authorised Service Centre.

ABS DEVICE

Check that the front (1) and rear (2) phonic wheels are clean.

Warning

Clogged reading slots would compromise system proper operation. It is recommended to disable ABS system in case of muddy road surface because under this condition the system might be subject to sudden failure.

Warning

Prolonged rearing could deactivate the ABS system.

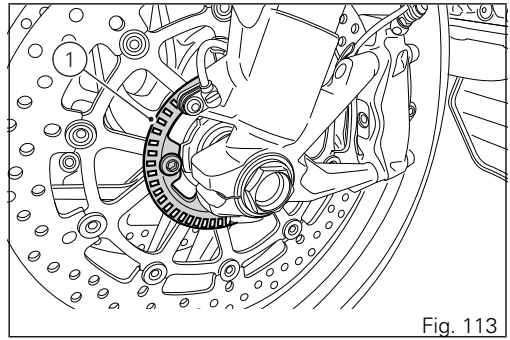

Fig. 113

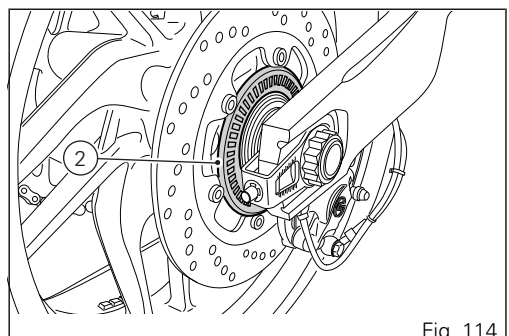

Fig. 114

Starting the engine

Warning
Before starting the engine, become familiar with the controls you will need to use when riding.

Warning
Never start or run the engine indoors. Exhaust gases are poisonous and may lead to loss of consciousness or even death within a short time.

Move the ignition switch to (1,Fig. 115). Make sure both the green light N and the red light on the instrument panel come on.

Important
The oil pressure light should go out a few seconds after the engine has started.

Warning
The side stand must be fully up (in a horizontal position) as its safety sensor prevents engine starting when down.

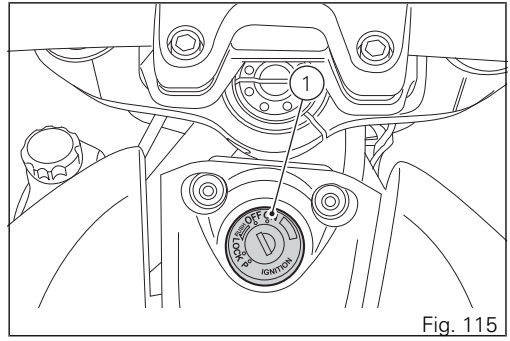

Fig. 115

Note
It is possible to start the engine with side stand down and the gearbox in neutral. When starting the motorcycle with a gear engaged, pull the clutch lever (in this case the side stand must be up).

Check that the stop switch (2, Fig. 116) is positioned to ∩ (RUN), then press the starter button (3, Fig. 116).
Let the motorcycle start without operating the throttle control.

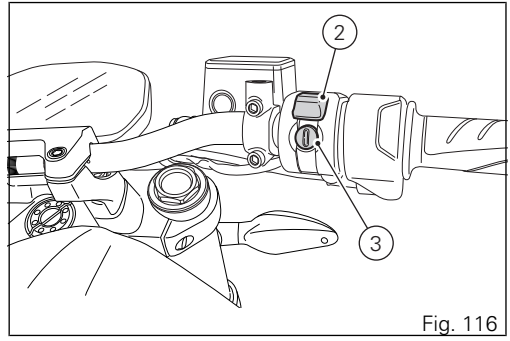

Fig. 116

Note

If the battery is flat, system automatically inhibits starter motor cranking operation.

Important

Do not rev up the engine when it is cold. Allow some time for oil to be heated and reach all points that need lubricating.

Moving off

1) Disengage the clutch squeezing the control lever.
2) Push down on gear change lever sharply with the tip of your foot to engage the first gear.
3) Raise the engine revs, turn the throttle twistgrip, while gradually releasing the clutch lever. The motorcycle will start moving.
4) Let go of clutch lever and speed up.
5) To shift up, close the throttle to slow down engine, disengage the clutch, lift the gear change lever and let go of clutch lever.

To shift down, proceed as follows: release the twistgrip, pull the clutch lever, shortly speed up to help gears synchronise, shift down (engage next lower gear) and release the clutch.
The controls should be used correctly and timely: when riding uphill do not hesitate to shift down as soon as the motorcycle tends to slow down, so you will avoid stressing the engine and the motorcycle abnormally.

Warning

Avoid harsh acceleration, as this may lead to misfiring and transmission snatching. The clutch lever should not be held in longer than necessary after a gear is engaged, otherwise friction parts may overheat and wear out.

Warning

Prolonged wheelies could deactivate the ABS system.

Braking

Slow down in time, shift down to use engine brake and then brake by operating both front and rear brakes. Pull the clutch before the motorcycle stops to avoid engine from suddenly stalling.

Anti-Lock Brake System (ABS)

Using the brakes correctly under adverse conditions is the hardest – and yet the most critical - skill to master for a rider. Braking is one of the most difficult and dangerous moments when riding a two wheeled motorcycle: the possibility of falling or having an accident during this difficult moment is statistically higher than any other moment. A locked front wheel leads to loss of traction and stability, resulting in loss of control.
The Anti-Lock Brake System (ABS) has been developed to enable riders to use the motorcycle braking force to the fullest possible amount in emergency braking or under poor pavement or adverse weather conditions.
ABS uses hydraulics and electronics to limit pressure in the brake circuit when a special sensor mounted to the wheel signals the electronic control unit that the wheel is about to lock up.
This avoids wheel lockup and preserves traction. Pressure is raised back up immediately and the control unit keeps controlling the brake until the risk of a lockup disappears.
Normally, the rider will perceive ABS operation as a harder feel or a pulsation of the brake lever and pedal.
The front and rear brakes use separate control systems, meaning that they operate independently. Likewise, the ABS is not an integral braking system and does not control both the front and rear brake at the same time.
If desired, the system can be deactivated from the instrument panel, using the function "Customising Riding Modes: ABS setting" (see page 95).

Warning

When ABS is disabled, the motorcycle restores the standard brake system features; using the two brake controls separately reduces the motorcycle braking efficiency. Never use the brake controls harshly or suddenly as you may lock the wheels and lose control of the motorcycle. When riding in the rain or on slippery surfaces, braking will become less effective. Always use the brakes very gently and carefully when riding under these conditions. Any sudden manoeuvres may lead to loss of control. When tackling long, high-gradient downhill road tracts, shift down gears to use engine braking. Apply one brake at a time and use brakes sparingly. Keeping the brakes applied all the time would cause the friction material to overheat and reduce braking power dangerously. Underinflated tyres reduce braking efficiency, handling accuracy and stability in a bend.

Stopping the motorcycle

Reduce speed, shift down and release the throttle twistgrip.
Shift down to engage first gear and then neutral.
Apply the brakes and bring the motorcycle to a complete stop.
To switch the engine off, simply turn the key to position (2).

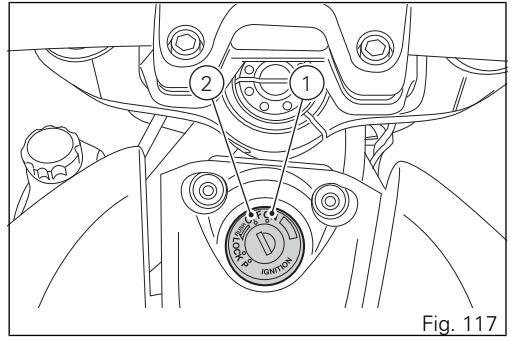

Fig. 117

Important

Do not leave the key to ON, position (1), with engine off in order to avoid damaging any electrical components.

Refuelling

Never overfill the tank when refuelling. Fuel should never be touching the rim of filler recess.

Warning

Use fuel with low lead content and an original octane number of at least 95.

Warning

The motorcycle is only compatible with fuel having a maximum content of ethanol of 10% (E10). Using fuel with ethanol content over 10% is forbidden. Using it could result in severe damage of the engine and motorcycle components. Using fuel with ethanol content over 10% will make the warranty null and void.

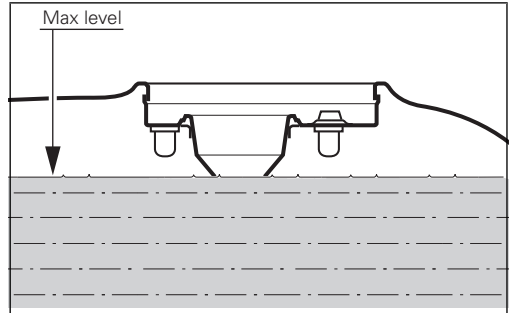

Fig. 118

Parking

Stop the motorcycle, then put it on the side stand (page 170).
To prevent theft, turn the handlebar fully left and turn the ignition key to the (3) position.
If you park in a garage or other indoor area, make sure that there is proper ventilation and that the motorcycle is not near a source of heat.
If required, turn the key to position (4) to leave the parking lights on.

Important

Do not leave the key to position (4) for a long time, or this could lead to battery discharge. Never leave the ignition key in the switch when you are leaving your motorcycle unattended.

Warning

The exhaust system might be hot, even after engine is switched OFF; pay particular attention not to touch the exhaust system with any body part and do not park the motorcycle next to inflammable material (wood, leaves etc.).

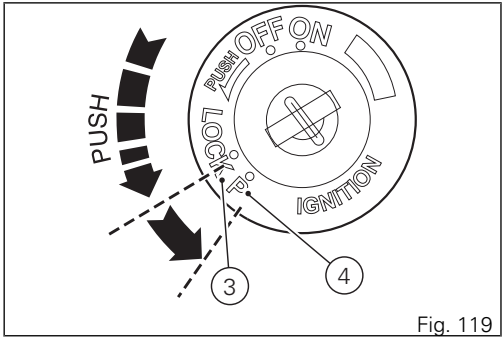

Fig. 119

Warning

Using padlocks or other locks designed to prevent motorcycle motion, such as brake disc locks, rear sprocket locks, and so on is dangerous and may impair motorcycle operation and affect the safety of rider and passenger.

Tool kit and accessories

The tool box (1) is located under the seat.
The tool box includes:

- fuse pliers;
- two helmet anti-theft system cables;
- flat-blade/Phillips screwdriver;
- screwdriver handgrip;
- box wrench, 14x16x145 mm;
- 6x120 mm rod;
- 3 mm Allen wrench;
- 4 mm Allen wrench;

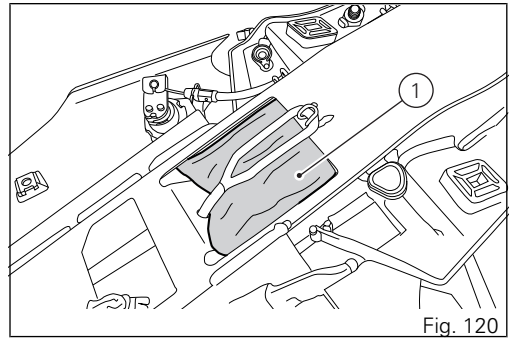

Fig. 120

Main maintenance operations

Checking coolant level and topping up, if necessary

Check coolant level in the expansion reservoir on the right side of the steering tube.
Steer completely to the left and check that the level is between the MIN and MAX marks on the side of the expansion reservoir.
Top up if the level is below the MIN mark.
Unscrew the filler plug (1) and add ENI Agip Permanent Spezial antifreeze (do not dilute, use pure), until reaching the MAX level.
Screw plug (1) into seat.

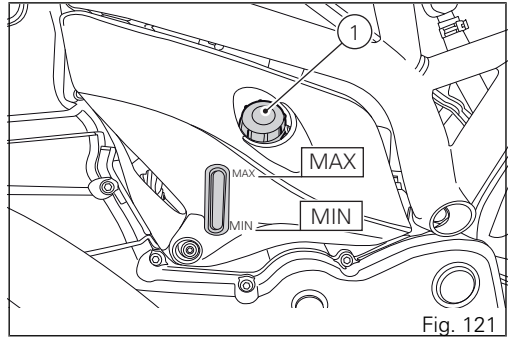

Fig. 121

This type of mixture ensures the best operating conditions (the coolant starts to freeze at -20 °C/-4 °F).
Cooling circuit capacity: 2.5 cu. dm (litres) (0.66 gallons).

Warning
Make sure the engine is cold before proceeding. Attempting to change the coolant with the engine hot could lead to burns from hot coolant or scalding steam.

Changing the air filter

Important
Have the air filter maintenance performed at a Ducati Dealer or Authorised Service Centre.

Check brake fluid level

The levels should not fall below the MIN marks on the respective reservoirs.
If level drops below the limit, air might get into the circuit and affect the operation of the system involved.
Brake and clutch fluid must be topped up and changed at the intervals specified in the scheduled maintenance table reported in the Warranty Booklet; please contact a Ducati Dealer or authorised Service Centre.

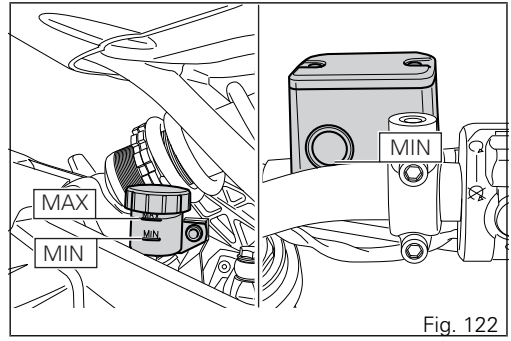

Fig. 122

Important

It is recommended all lines be changed every four years.

BRAKE SYSTEM

If you find exceeding clearance on brake lever or pedal and brake pads are still in good condition, contact your Ducati Dealer or authorised Service Centre to have the system inspected and any air drained out of the circuit.

Warning

Brake fluid can damage paintwork and plastic parts, so avoid contact.
Hydraulic oil is corrosive; it may cause damage and lead to severe injuries. Never mix fluids of different qualities. Check seals for proper sealing.

Checking brake pads for wear

Check brake pads wear through the inspection hole in the callipers.
Change both pads if friction material thickness of even just one pad is about 1 mm.

Warning

Friction material wear beyond this limit would lead to metal support contact with the brake disc thus compromising braking efficiency, disc integrity and rider safety.

Important

Have the brake pads replaced at a Ducati Dealer or authorised Service Centre.

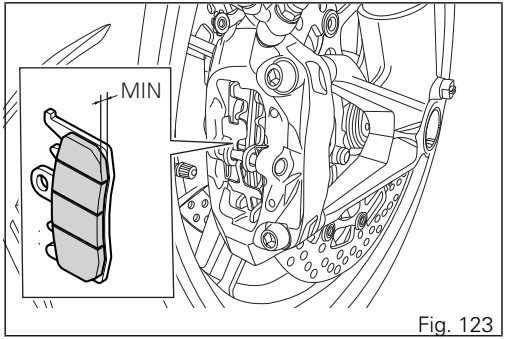

Fig. 123

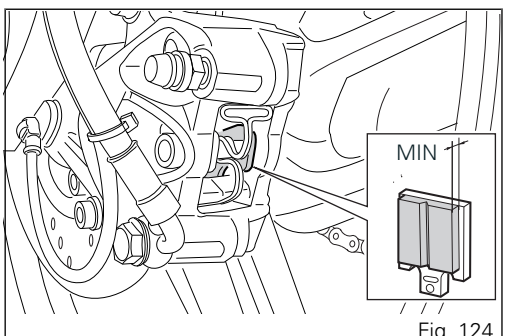

Fig. 124

Charging the battery

Warning
Have the battery removed at a Ducati Dealer or authorised Service Centre.

To reach the battery, refer to "Removing the battery" page 202.

Warning
The battery gives off explosive gases; never cause sparks or allow naked flames and cigarettes near the battery. When charging the battery, ensure that the working area is properly ventilated.

Charge the battery in a ventilated room.
Connect the battery charger leads to the battery terminals: the red one to the positive terminal (+), the black one to the negative terminal (-).
Smear positive pole (+) and negative pole (-) screws with grease.

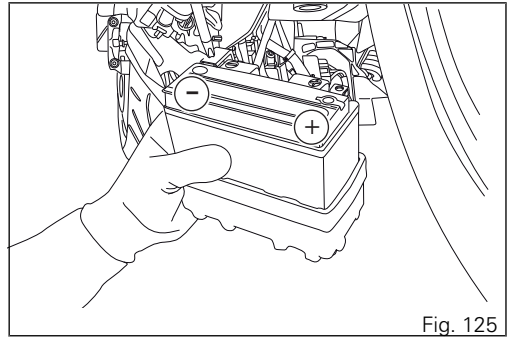

Fig. 125

Important
Make sure the charger is OFF when you connect the battery to it, or you might get sparks at the battery terminals that could ignite the gases inside the cells. Always connect the red positive (+) terminal first.

Charge the battery at 0.9 A for 5÷10 hours.
Install the battery on the vehicle as described under "Refitting the battery" page 208.

Warning
Keep the battery out of the reach of children.

Jump-starting the motorcycle

If the motorcycle must be jump-started in an emergency with an external starting device, first loosen screws (2) using the supplied wrench to remove the battery cover (1).

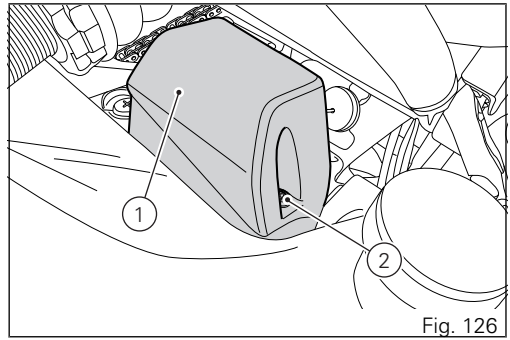

Fig. 126

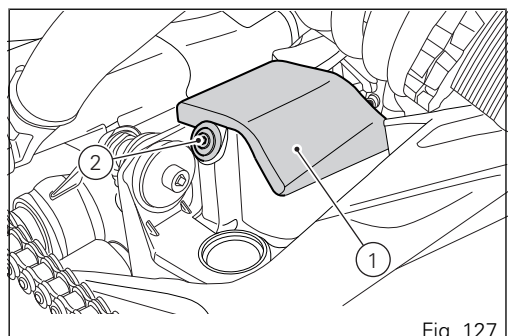

Fig. 127

Connect the positive pole of the external device to the battery positive pole (3).
Connect the negative pole of the external device to engine mounting screw (4), after removing both covers on engine LH side.
To remove the covers, refer to "Removing the battery" page 202.

Warning

When connecting the positive pole of the external device to the positive pole (3) of the battery, pay utmost attention not to touch any other metal parts on the vehicle.

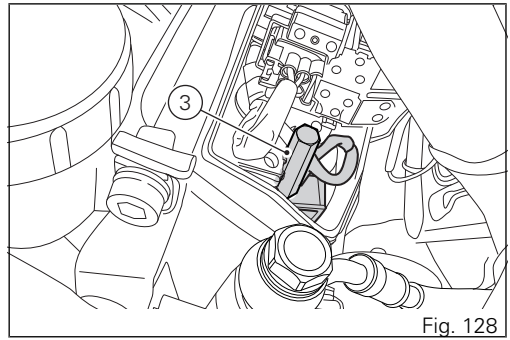

Fig. 128

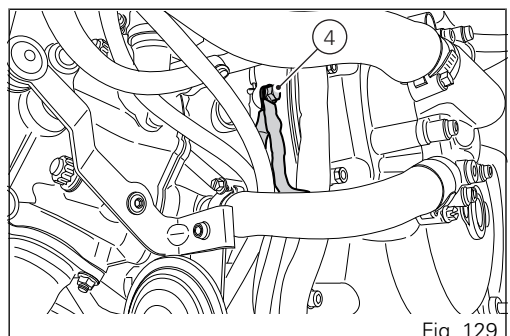

Fig. 129

Charging and maintenance of the battery during winter storage

Your motorcycle is equipped with a connector (1), located under the seat, to which you can connect a special battery charger (2) (Battery maintainer kit part no. 69924601A - various countries; Battery maintainer kit part no. 69924601AX - for Japan, China and Australia only) available from our sales network.

Note

The electric system of this model is designed so as to ensure there is a very low power drain when the motorcycle is OFF. Nevertheless, the battery features a certain self-discharge rate that is normal and depends on ambient conditions as well as on "non-use" time.

Important

If battery is not kept at a minimum charge level by a suitable battery charge maintainer, sulphation may occur and this is an irreversible phenomenon causing decreasing battery performance.

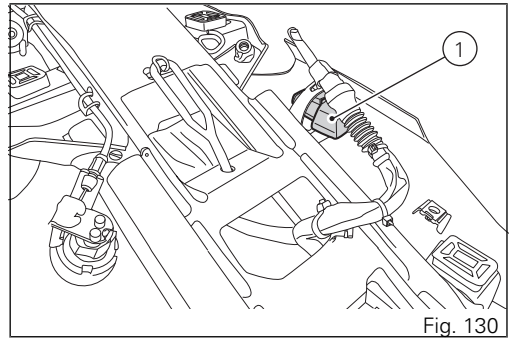

Fig. 130

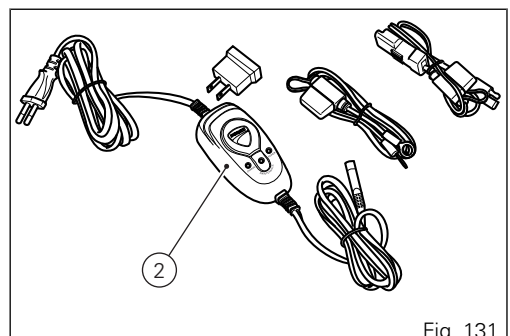

Fig. 131

Note

When the motorcycle is left unused (approximately for more than 30 days) we recommend owners to use the Ducati battery charge maintainer (Battery maintenance kit part no. 69924601A - various countries; Battery maintainer kit part no. 69924601AX - for Japan, China and Australia only) since its electronics monitors the battery voltage and features a maximum charge current of 1.5 Ah. Connect the maintainer to the diagnostics socket located in the rear side of the motorcycle.

Note

Using charge maintainers not approved by Ducati could damage the electric system; motorcycle warranty does not cover the battery if damaged due to failure to comply with the above indications, since it is considered as wrong maintenance.

Removing the battery

Important

When battery must be removed, ALWAYS contact a Ducati Dealer or authorised Service Centre.

Loosen the screw (1) and remove the cover (2).
Loosen the screws (3) and remove the cover (4).
Undo the screw (5) and disconnect the ground cable (6).

Warning

Insulate the ground cable end you just removed to prevent it from touching the motorcycle.

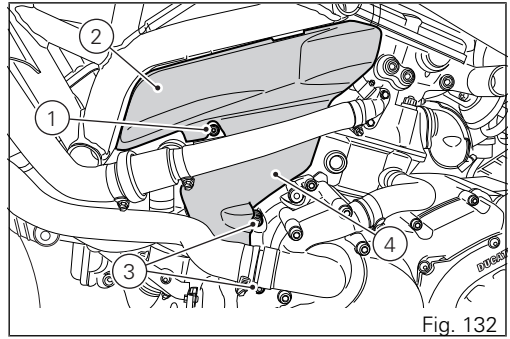

Fig. 132

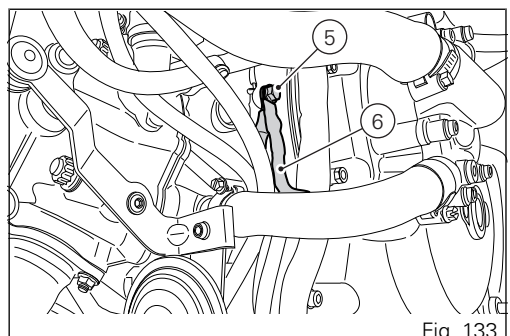

Fig. 133

Loosen screws (7) on battery cover (8).

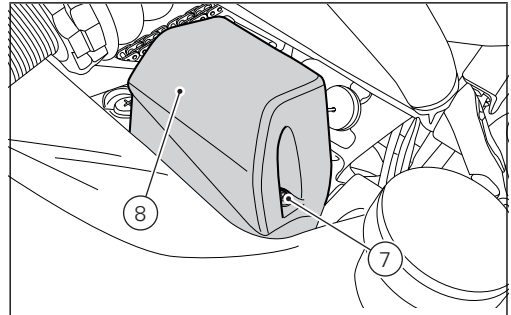

Fig. 134

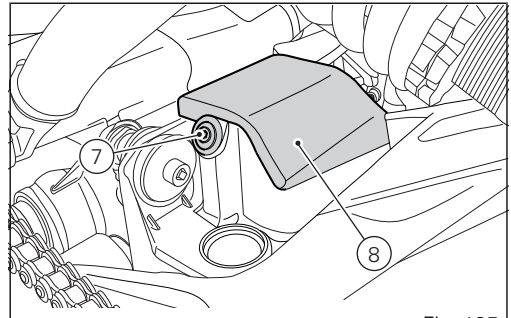

Fig. 135

Loosen the special screw (9) retaining battery positive cable terminals (10) and ABS positive terminal (11) to battery positive pole.
Fit a service pin (P) in the hole on electric components support (Q) to change the battery.

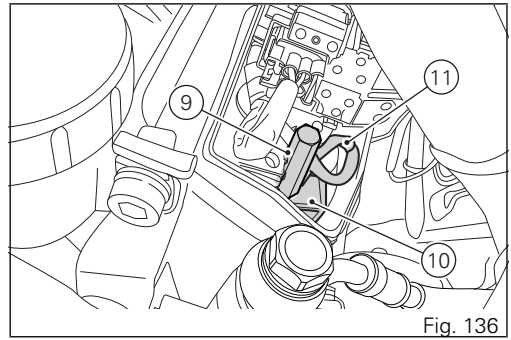

Fig. 136

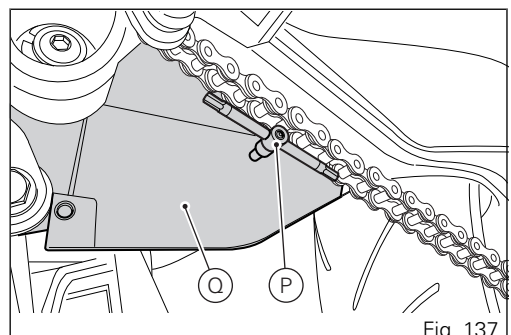

Fig. 137

Loosen the screws (12) securing battery mount cover (13) to electric components support.

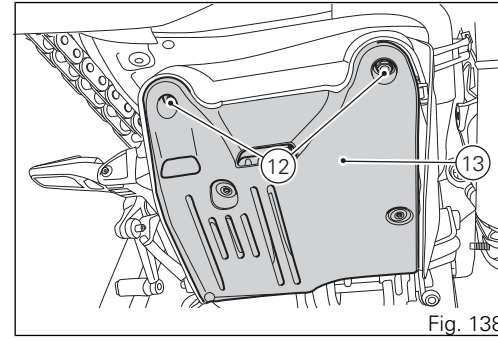

Fig. 138

Turn battery mount cover (13) down and remove service pin (P) while supporting the battery (14) with your hand.
Slowly slide down battery (14), pay attention to the negative pole which is still connected to the wiring.

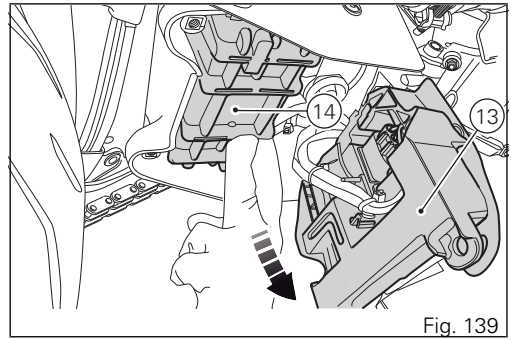

Fig. 139

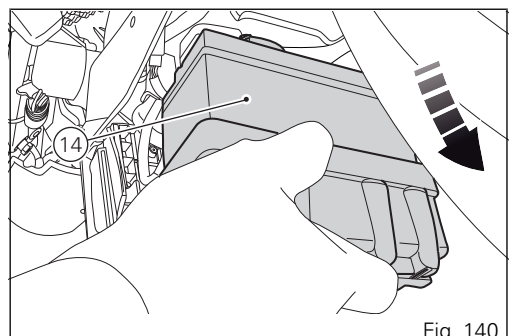

Fig. 140

Loosen screw (15) securing negative cable (16) to battery negative pole and remove the battery.

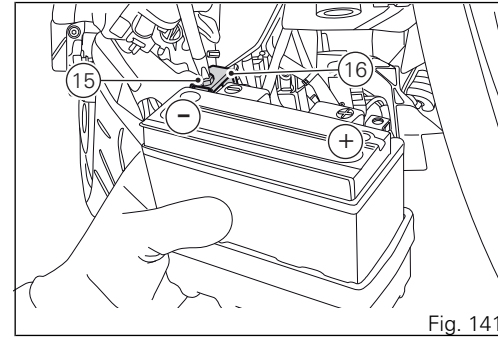

Fig. 141

Refitting the battery

Important

When battery must be refitted, ALWAYS contact a Ducati Dealer or authorised Service Centre.

Fit the battery negative cable (16) on battery negative pole and fasten it by tightening screw (15) to 10 Nm ± 10%.
Install battery (14) in its seat, from swinging arm bottom side.

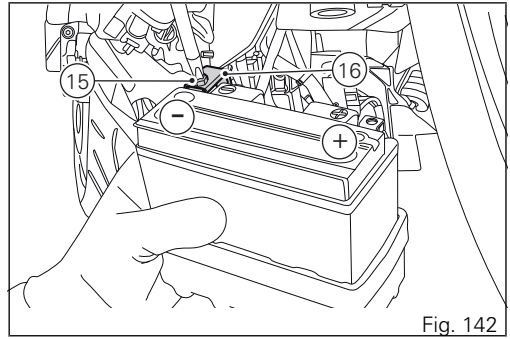

Fig. 142

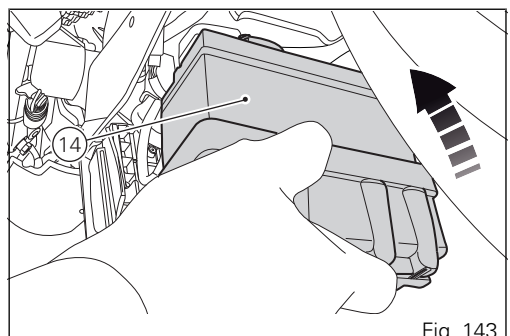

Fig. 143

Once battery (14) is in place, fit service pin (P) in the hole on electric components support (Q) to support the battery.
Raise the battery mount cover (13) until it gets against the battery.

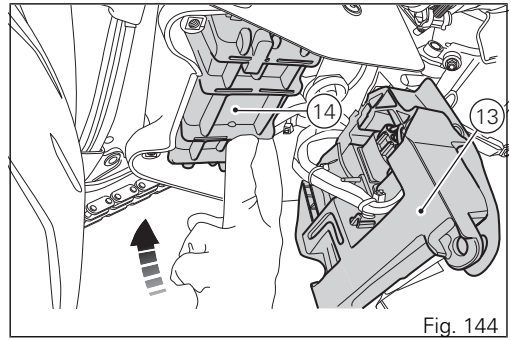

Fig. 144

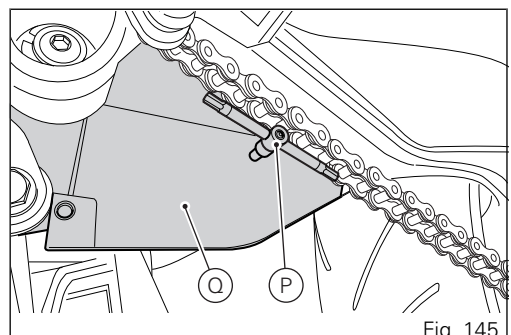

Fig. 145

Slide out pin (P) and fasten battery mount cover (13) using screws (12); tighten them to 5 Nm ± 10%.

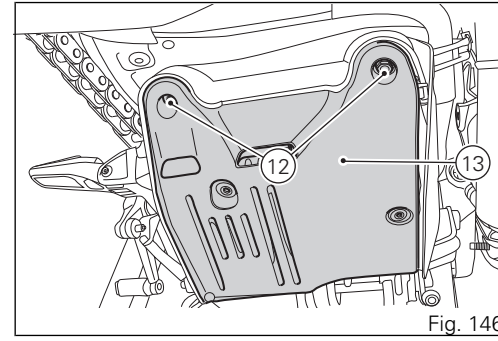

Fig. 146

Fit the positive cable (10) and ABS positive cable (11) on battery positive pole and fasten it by tightening screw (9) to 10 Nm ± 10%.
Fit the battery cover (8) on electric components support.

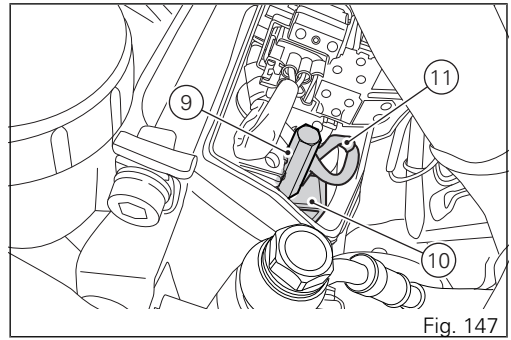

Fig. 147

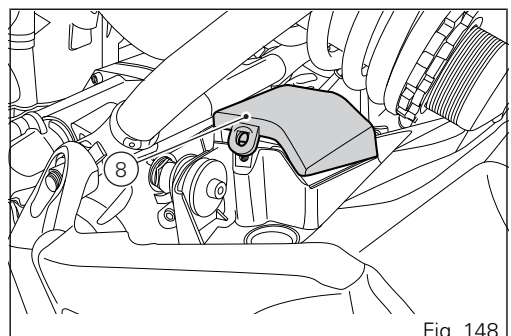

Fig. 148

Start screws (7) and tighten them to a torque of 4 Nm ± 10%.

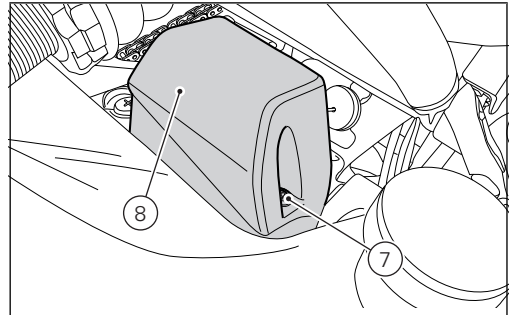

Fig. 149

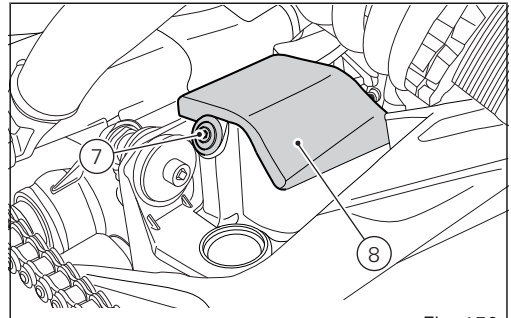

Fig. 150

Fit the ground cable (6) on motorcycle and fasten it by tightening screw (5) to 10 Nm ± 10%.
Install cover (4) and tighten the screws (3) to a torque of 5 Nm ± 10%.
Install cover (2) and tighten the screw (1) to a torque of 1 Nm ± 10%.

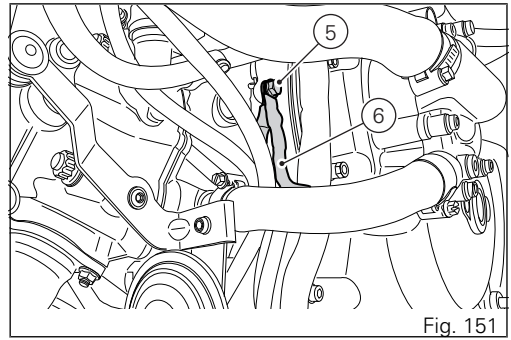

Fig. 151

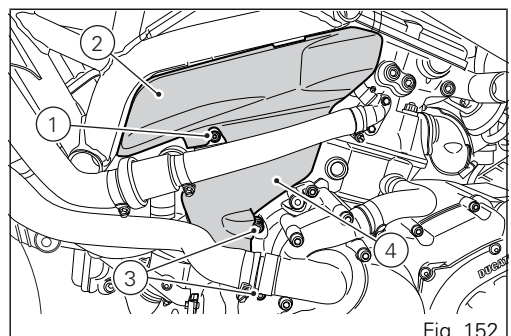

Fig. 152

Checking drive chain tension

Important
Have chain tension adjusted by a Ducati Dealer or authorised Service Centre.

Make the rear wheel turn until you find the position where chain is tightest. Set the motorcycle on the side stand. With just a finger, push down the chain at the point of measurement and release. Measure the distance (A) between the centre of the chain pins and the aluminium section of the swinging arm. It must be: A = 28 ÷ 30 mm.

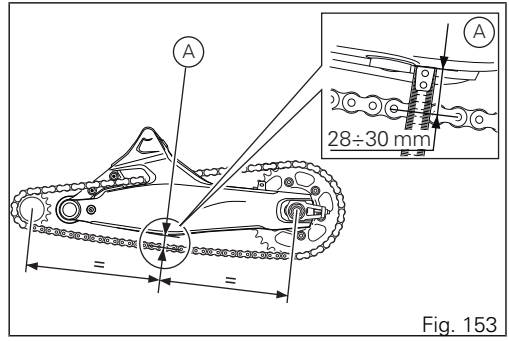

Fig. 153

Important
If drive chain is too tight or slack, adjust tension so as to bring values back to the specified range.

Warning

Correct tightening of the swingarm screws (2) is essential to rider and passenger safety.

Important

Improper chain tension will lead to early wear of transmission parts.

Check the correspondence of the positioning marks on both sides of the swinging arm to ensure a perfect wheel alignment. Grease the wheel shaft nut thread (1) with SHELL Retinax HDX2 and tighten it to a torque of 145 Nm. Grease the adjuster screws (2) thread with SHELL Alvania R3 and tighten them to a torque of 10 Nm.

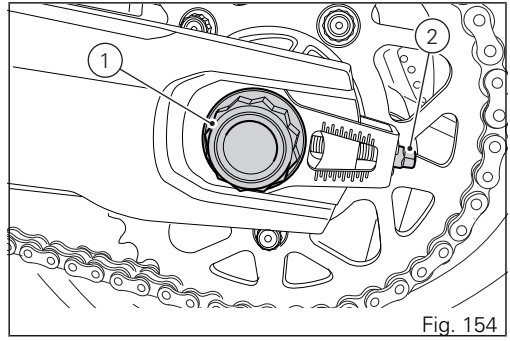

Fig. 154

Chain lubrication

The chain fitted on your motorcycle has O-rings to protect its moving parts from dirt, and to hold the lubricant inside.
So as not to damage these seals when cleaning the chain, use special solvents and avoid aggressive washing with high-pressure steam cleaners. After cleaning, blow the chain dry or dry it using absorbent material and apply SHELL Advance Chain or Advance Teflon Chain on each link.

Important

Using non-specific lubricants may cause severe damage to the chain and the front and rear sprockets.

Replacing the bulbs

Before replacing a burnt-out bulb, make sure that the new one matches the voltage and wattage specifications in paragraph "Electric System" page 244.

Important

Have the bulbs changed at a Ducati Dealer or authorised Service Centre.

Undo the screw (1) and detach the lens (2) from the turn indicator support.
The bulb has a bayonet joint: press and twist counter clockwise to remove it. Remove the bulb, then fit the new one by pressing and turning clockwise until it clicks into its seat. Refit the lens by inserting the tab in the corresponding slot in the turn indicator support. Tighten the screw (1).

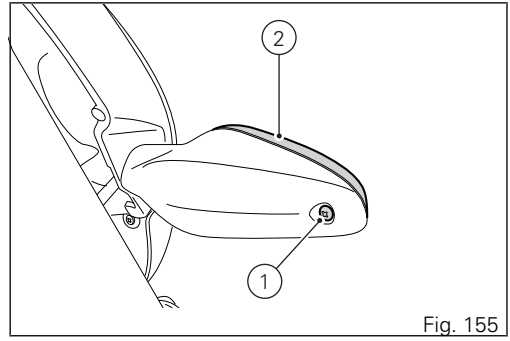

Fig. 155

Beam setting

Check correct headlight aiming. Position the motorcycle 10 metres from a wall or a screen, the motorcycle must be perfectly upright with the tires inflated to the correct pressure and with a rider seated, perfectly perpendicular to the longitudinal axis. On the wall or surface, draw a horizontal line at the same height from the ground as the centre of the headlight and a vertical line aligned with the longitudinal axis of the motorcycle. If possible, perform this check in dim light. Switch on the low beam. The height of the upper limit between the dark area and the lit area must not be more than 9/10 of the height from the ground of the headlight centre.

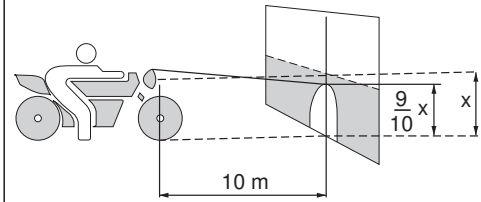

Fig. 156

Note

This is the procedure specified by Italian regulations for checking the maximum height of the light beam. Please adapt said procedure to the provisions in force in your own country.

To vertically align the headlight beam, turn the screw (1).

Warning

The headlight might fog up if the motorcycle is used under the rain or after washing. Switch headlight on for a short time to dry up any condensate.

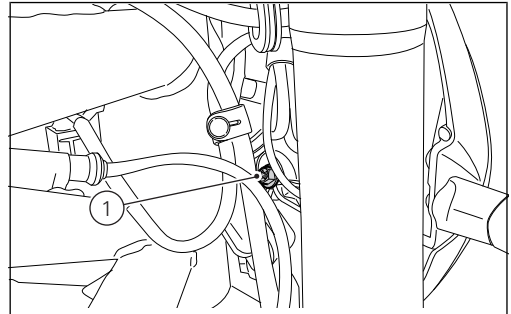

Fig. 157

Tyres

Front tyre pressure:
2.50 bar (rider only) - 2.6 bar (rider and passenger).
Rear tyre pressure:
2.50 bar (rider only) - 2.8 bar (rider and passenger).

As tyre pressure is affected by ambient temperature and altitude variations, you are advised to check and adjust it whenever you are riding in areas where ample variations in temperature or altitude occur.

Important

Check and set tyre pressure when tyres are cold. To avoid front wheel rim distortion, when riding on bumpy roads, increase tyre pressure by 0.2 ÷ 0.3 bar.

TYRE REPAIR OR CHANGE

In the event of a tiny puncture, tubeless tyres will take a long time to deflate, as they tend to keep air inside. If you find low pressure on one tyre, check the tyre for punctures.

Warning

Punctured tyres must be replaced. Replace tyres with recommended standard tyres only. Be sure to tighten the valve caps securely to avoid leaks when riding. Never use tube type tyres. Failure to heed this warning may lead to sudden tyre bursting and to serious danger to rider and passenger.

After replacing a tyre, the wheel must be balanced.

Warning

Do not remove or shift the wheel balancing weights.

Note

Have the tyres replaced at a Ducati Dealer or authorised Service Centre. Correct removal and installation of the wheels is essential. Some parts of the ABS (such as sensors and phonic wheels) are mounted to the wheels and require specific adjustment.

MINIMUM TREAD DEPTH
Measure tread depth (S) at the point where tread is most worn down: it should not be less than 2 mm, and in any case not less than the legal limit.

Important

Visually inspect the tyres at regular intervals for detecting cracks and cuts, especially on the side walls, bulges or large spots that are indicative of internal damage. Replace them if badly damaged. Remove any stones or other foreign bodies caught in the tread.

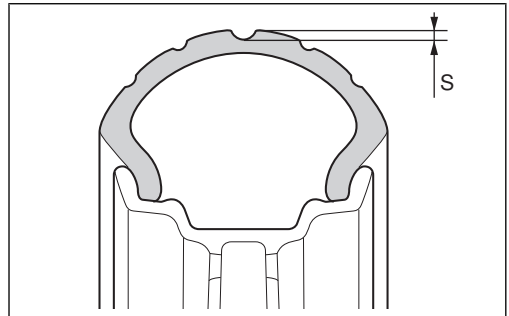

Fig. 158

Check engine oil level

Engine oil level can be checked through the sight glass (1) located onto clutch cover.
Oil level must be checked with the motorcycle perfectly upright and the engine cold.
Oil level should be between the marks on the sight glass. If the level is low, top up with engine oil.
Ducati recommends you use Shell Advance 4T Ultra 15W-50 oil. As an alternative it is possible to use a motorcycle engine oil having the same degree SAE 15W-50 and meeting the following specifications JASO: MA2 and API: SM.
Remove the oil filler cap (2) and top up until the oil reaches the required level. Refit the filler plug (2).

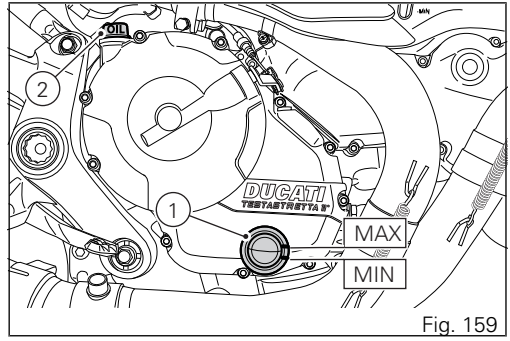

Fig. 159

Important

Engine oil and oil filters must be changed by a Ducati Dealer or authorised Service Centre at the intervals specified in the scheduled maintenance chart reported in the Warranty Card.

Recommendations concerning oil

It is recommended to use oil complying with the following specifications:

- viscosity grade SAE 15W-50;
- standard API: SM;
- standard JASO: MA2.

SAE 15W-50 is an alphanumerical code identifying oil class based on viscosity: two figures with a W ("winter") in-between; the first figure indicates oil viscosity at low temperature; the second figure indicates its viscosity at high temperature. API (American standard) and JASO (Japanese standard) standards specify oil characteristics.

Cleaning and replacing the spark plugs

Spark plugs are essential to smooth engine running and should be checked at regular intervals.
Have the spark plug replaced at a Ducati Dealer or authorised Service Centre.

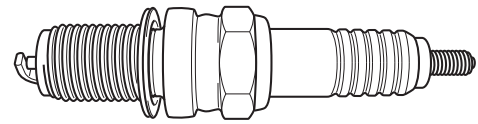

Fig. 160

Cleaning the motorcycle

To preserve the finish of metal parts and paintwork, wash and clean your motorcycle at regular intervals, anyway according to the road conditions you ride in. Use specific products only. Prefer biodegradable products. Avoid aggressive detergents or solvents. Only use water and neutral soap to clean the Plexiglas and the seat. Periodically manually clean all aluminium components. Use special detergents, suitable for aluminium parts FREE of abrasives or caustic soda.

Note

Do not use sponges with abrasive parts or steel wool: only use soft cloths.

However, the warranty does not apply to motorcycles whenever poor maintenance status is ascertained.

Important

Do not wash your motorcycle right after use. When the motorcycle is still hot, water drops will evaporate faster and spot hot surfaces.
Never clean the motorcycle using hot or high-pressure water jets.
Cleaning the motorcycle with a high pressure water jet may lead to seizure or serious faults in forks, wheel hubs, electric system, headlight (fogging), fork seals, air inlets or exhaust silencers, with consequent loss of compliance with the safety requirements.
Clean off stubborn dirt or exceeding grease from engine parts using a degreasing agent. Be sure to avoid contact with drive parts (chain, sprockets, etc.).

Rinse with warm water and dry all surfaces with chamois leather.

Warning

Braking performance may be impaired immediately after washing the motorcycle. Never grease or lubricate the brake discs to avoid losing braking power. Clean the discs with an oil-free solvent.

Warning
The headlight might fog up due to washing, rain or moisture. Switch headlight on for a short time to help and dry up any condensate.

Carefully clean the phonic wheels of the ABS so to ensure system efficiency. Do not use aggressive products so to avoid damaging the phonic wheels and the sensors.

Storing the motorcycle

If the motorcycle is to be left unridden over long periods, it is advisable to carry out the following operations before storing it away:

- clean the motorcycle;
- empty the fuel tank;
- pour a few drops of engine oil into the cylinders through the spark plug bores, then turn the engine over by hand a few times to form a protective film of oil on the inner walls of the cylinder;
- place the motorcycle on the service stand;
- disconnect and remove the battery.

If the motorcycle has been left unused for more than a month, the battery should be checked and recharged if necessary.
Protect the motorcycle with a suitable canvas. This will protect paintwork and let condensate breathe out. The canvas is available from Ducati Performance.

Important notes

The legislation in some countries (France, Germany, Great Britain, Switzerland, etc.) sets certain noise and pollution standards.
Periodically carry out the required checks and replace parts as necessary, using Ducati original spare parts, in compliance with the regulations in the country concerned.

Maintenance

Scheduled maintenance chart: operations to be performed by the Dealer

List of operations and type of intervention (set mileage (km/mi) or time interval *)	**Km x1,000**	**1**	**15**	**30**	**45**	**60**	**Time (months)**
	mi x1,000	**0.6**	**9**	**18**	**27**	**36**	
Reading of the error memory with DDS and check of software version update on control units		●	●	●	●	●	12
Check the presence of any technical updates and recall campaigns		●	●	●	●	●	12
Change engine oil and filter		●	●	●	●	●	12
Clean the engine oil mesh filter assembly		●		●		●	-
Check and/or adjust valve clearance				●		●	-
Change timing belts				●		●	60
Change spark plugs			●	●	●	●	-
Clean air filter			●		●		-
Change air filter				●		●	-
Check brake fluid level		●	●	●	●	●	12
Change brake fluid							36
Check brake disc and pad wear. Change if necessary		●	●	●	●	●	12

List of operations and type of intervention (set mileage (km/mi) or time interval *)	Km x1,000	1	15	30	45	60	Time (months)
	mi x1,000	0.6	9	18	27	36	
Check the proper tightening of brake calliper bolts and brake disc flange screws		●	●	●	●	●	12
Check front and rear wheel nuts tightening		●	●	●	●	●	12
Check frame-to-engine fasteners tightening			●	●	●	●	-
Check wheel hub bearings				●		●	-
Check and lubricate the rear wheel shaft				●		●	-
Check the cush drive damper on rear sprocket				●		●	-
Check the proper tightening of final drive front and rear sprocket nuts		●	●	●	●	●	12
Check final drive (chain, front and rear sprocket) and sliding shoe wear			●	●	●	●	12
Check final drive chain tension and lubrication		●	●	●	●	●	12
Check steering bearings and lubricate, if necessary				●		●	-
Change front fork fluid				●		●	-
Visually check the front fork and rear shock absorber seals		●	●	●	●	●	12
Check the freedom of movement and tightening of the side and central stand (if any)		●	●	●	●	●	12

List of operations and type of intervention (set mileage (km/mi) or time interval *)	Km x1,000	1	15	30	45	60	Time (months)
	mi x1,000	0.6	9	18	27	36	
Visually check the fuel lines			●	●	●	●	12
Check rubbing points, clearance, freedom of movement and positioning of hoses and electric wiring in view		●	●	●	●	●	12
Lubricate the levers at the handlebar and pedal controls			●	●	●	●	12
Change coolant					●		48
Check the coolant level and check circuit for damage		●	●	●	●	●	12
Check tyre pressure and wear		●	●	●	●	●	12
Check the battery charge level		●	●	●	●	●	12
Check the operation of the safety electrical devices (side stand switch, front and rear brake switches, engine stop switch, gear/neutral sensor)		●	●	●	●	●	12
Check lighting, turn indicators, horn and controls		●	●	●	●	●	12
Reset the Service indication through the DDS		●	●	●	●	●	-
Final test and road test of the motorcycle, testing safety devices (ex. ABS and DTC), electric fans and idling		●	●	●	●	●	12
Softly clean the motorcycle		●	●	●	●	●	12
Fill out that the service was performed in on-board documentation (Service Booklet)		●	●	●	●	●	12

Scheduled maintenance chart: operations to be performed by the customer

List of operations and type of intervention (set mileage (km/mi) or time interval *)	**Km x1,000**	**1**
	mi x1,000	**0.6**
	Months	**6**
Check engine oil level		●
Check brake fluid level		●
Check tyre pressure and wear		●
Check final drive chain tension and lubrication		●
Check brake pads. If necessary, contact your dealer to replace pads		●

* Service on the set interval, whichever comes first (mileage or months)

Technical data

Weights

Overall weight (in running order with 90% of fuel - 93/93/EC): 205.5 kg.
Overall weight (without fluids and battery): 179.5 kg.
Maximum allowed weight (carrying full load): 390 kg.

Warning

Failure to observe weight limits could result in poor handling and impair the performance of your motorcycle, and you may lose control of the motorcycle.

Dimensions

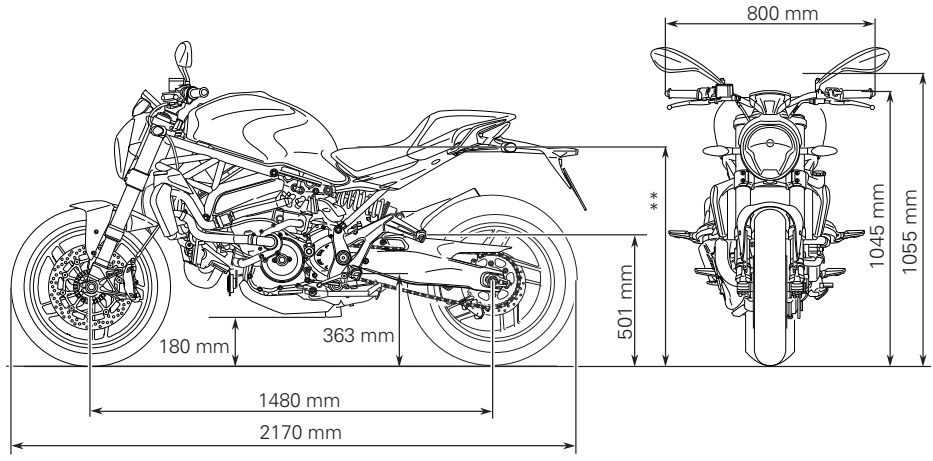

Fig. 161

** Adjustable seat height 785 mm - 810 mm.

Fuel, lubricants and other fluids

FUEL, LUBRICANTS AND OTHER FLUIDS	TYPE	
Fuel tank, including a reserve of 2.5 cu. dm (litres)	Unleaded fuel with a minimum octane rating of RON 95.	17.5 cu. dm (litres)
Oil sump and filter	Ducati recommends you use Shell Advance 4T Ultra 15W-50 oil. As an alternative it is possible to use a motorcycle engine oil having the same degree SAE 15W-50 and meeting the following specifications JASO: MA2 and API: SM	3.2 cu. dm (litres)
Front/rear brake and clutch circuits	SHELL Advance Brake DOT 4	-
Protectant for electric contacts	SHELL Advance Contact Cleaner	-
Front fork	SHELL Advance Fork 7.5 or Donax TA	521 cu. cm (RH leg) 394 cu. cm (LH leg)
Cooling circuit	ENI Agip Permanent Spezial antifreeze (do not dilute, use pure)	2.5 cu. dm (litres)

Important

Do not use any additives in fuel or lubricants. Using them could result in severe damage of the engine and motorcycle components.

Warning

The motorcycle is only compatible with fuel having a maximum content of ethanol of 10% (E10). Using fuel with ethanol content over 10% is forbidden. Using it could result in severe damage of the engine and motorcycle components. Using fuel with ethanol content over 10% will make the warranty null and void.

Engine

Twin cylinder, four-stroke, 90° "L" type, longitudinal.
Bore, mm:
88.
Stroke, mm:
67.5.
Total displacement, cu. cm:
821.1.
Compression ratio:
12.8±0.5:1
Max crankshaft power (95/1/EC), kW/HP:
82.4 kW/112 HP at 9,250 rpm.
(35 kW version) 35 kW at 8,000 rpm.
Max torque at crankshaft (95/1/EC):
9.1 kgm/89.4 Nm at 7,750 rpm
(35 kW version) 53 Nm at 5,250 rpm.
Maximum rpm:
10,500.

Important

Do not exceed the specified rpm limits in any running conditions.

Timing system

DESMODROMIC system with four valves per cylinder controlled by eight rocker arms (four opening and four closing ones) and two overhead camshafts. This system is driven by the crankshaft through spur gears, pulleys and toothed belts.

Desmodromic timing system

1) Opening (or upper) rocker arm;
2) Upper rocker arm shim;
3) Closing (or lower) rocker arm shim;
4) Return spring for lower rocker arm;
5) Closing (or lower) rocker arm;
6) Camshaft;
7) valve.

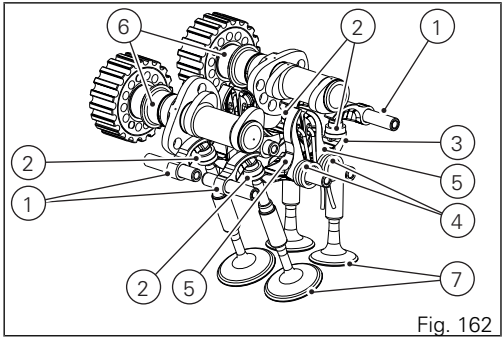

Fig. 162

Performance data

Maximum speed in any gear should be reached only after a correct running-in period with the motorcycle properly serviced at the recommended intervals.

Important

Failure to follow these instructions releases Ducati Motor Holding S.p.A. from any liability whatsoever for any engine damage or shorter engine life.

Spark plugs

Make: NGK
Type: MAR9A-J.

Fuel system

CONTINENTAL M3D indirect electronic injection.
MIKUNI throttle body with full Ride by wire system, diameter: 53 mm
Injectors per cylinder: 1
Firing points per injector: 4
Fuel supply: 95-98 RON.

Warning

The motorcycle is only compatible with fuel having a maximum content of ethanol of 10% (E10). Using fuel with ethanol content over 10% is forbidden. Using it could result in severe damage of the engine and motorcycle components. Using fuel with ethanol content over 10% will make the warranty null and void.

Brakes

Separate-action anti-lock brake system operated by hall-type sensors mounted to each wheel with phonic wheel detection: ABS can be disabled.

Front
Type: with drilled steel disc.
no. 2 discs.
Disc diameter: 320 mm.
Hydraulically operated by a control lever on handlebar right-hand side.
Monoblock brake callipers with separate pistons.
Make and type: Brembo M4.32 b.
Friction material: Toshiba TT2182FF.
Master cylinder type:
PR 16/22.
Cylinder Ø: 16 mm.

Rear
Type: with fixed drilled steel disc.
Disc diameter: 245 mm.
Hydraulically operated by a pedal on RH side.
Brake calliper: 34 mm Ø cylinder.
Make and type: Brembo P 34 e
Friction material: Toshiba TT2172 HH.
Master cylinder type: PS 11.
Cylinder Ø: 11 mm.

Warning

The brake fluid used in the brake system is corrosive.
In the event of accidental contact with eyes or skin, wash the affected area with abundant running water.

Transmission

Wet slipper clutch with less effort at the lever controlled by the lever on left-hand side of the handlebar.
Drive is transmitted from engine to gearbox main shaft via spur gears.
Front chain sprocket/clutch gearwheel ratio: 33/61.
6-speed gearbox with constant mesh gears and gear change pedal on left side of motorcycle.

Gearbox output sprocket/rear chain sprocket ratio: 15/46.
Total gear ratios:
1st gear 37/15
2nd gear 30/17
3rd gear 28/20
4th gear 26/22
5th gear 24/23
6th gear 23/24

Drive chain from gearbox to rear wheel.
Make: Regina
Type: 520 ZRDK
Size: 5/8" x 1/4"
Links: 108

Important

The above gear ratios are the homologated ones and under no circumstances must they be modified.

Warning

If the rear sprocket needs replacing, contact a Ducati Dealer or authorised Service Centre.
If improperly replaced, this component could seriously endanger your safety, as well as the passenger one, and cause irreparable damage to your motorcycle.

Frame
Molybdenum-chrome steel tubular trellis, cast aluminium rear subframe
Steering angle (per side): 30°
Steering head angle: 24.3°
Trail in mm: 93.2

Wheels
Ten-spoke light aluminium alloy rims.

Front
Size: MT3.50x17"

Rear
Size: MT5.50x17"

Both wheel shafts can be removed.

Tyres
Front
"Tubeless", radial tyre.
Size: 120/70-ZR17

Rear
"Tubeless", radial tyre.
Size: 180/60-ZR17

Suspensions
Monster 821 Stripe

FRONT
KAYABA hydraulic upside-down fork with spring preload, compression and rebound adjustment.
Stanchion diameter: 43 mm.
Wheel travel: 130 mm.

REAR
Progressive with Sachs monoshock, with rebound and spring preload adjustment.
Suspension travel: 61.5 mm.
Rear wheel travel: 147 mm.

Monster 821 / 821 Dark

FRONT
KAYABA hydraulic upside-down fork.
Stanchion diameter: 43 mm.
Wheel travel: 130 mm.

REAR
Progressive with Sachs monoshock, with rebound and spring preload adjustment.
Suspension travel: 61.5 mm.
Rear wheel travel: 147 mm.

Exhaust system
Equipped with catalytic converter.

Available colours

Monster 821

(this model is provided with seat cover)

RED
Primer, Acriflex White code L0040652 (Lechler).
Primer, Ducati Red code 473.101 (PPG).
Varnish, Acriplast Red Stoner SF code LMC06017 (Lechler).
Charcoal black frame code 44974 (INVER SPA).
Rear subframe, matt black powder enamel code CN201V (Akzo Nobel).
Black wheel rims

STAR WHITE SILK
Primer 2 K White code 873.AC001 (Palinal).
Primer, Star White code 928.T948 (Palinal).
Clear coat code 96598 (Lechler).
Ducati red frame, code 81784 (INVER SPA).
Rear subframe, matt black powder enamel code CN201V (Akzo Nobel).
Red wheel rims.

Monster 821 Dark

(this model is not provided with seat cover)

DARK STEALTH
Primer (Primer 2 K Black) code 873.A002 (PALINAL).
Base (Black Stealth - Black 94) code 929.R223 (PALINAL).
Clear coat (clear coat 2K matt) code 923I.2176 (PALINAL).
Charcoal black frame code 44974 (INVER SPA).
Rear subframe, matt black powder enamel code CN201V (Akzo Nobel).
Black wheel rims.

Monster 821 Stripe

(this model is provided with seat cover)

Ducati Anniversary red code 473.1010 (PPG) with White Stripe;
Clear coat code 228.880 (PPG);
Red frame and black rims.

Electrical system

Basic electric items are:
HEADLIGHT:
low beam: H4 BV (12 V - 60/55 W).
high beam: H4 BV (12 V - 60/55 W).
parking light: with six LEDs, 12 V - 2.8 W.
ELECTRICAL CONTROLS ON HANDLEBAR
front turn indicators: 12 V - 10 W lamp.
rear turn indicators: 12 V - 10 W lamp.
Horn.
Stop light switches.
Battery, 12 V-10 Ah.
Generator 490 W - 14 V - 34.8 A.
ELECTRONIC REGULATOR, protected by 2 fuses, 30 A, on solenoid starter (C) sides.
Starter motor, 12 V-0.7 kW.
Tail and stop light: LEDs.
parking light: with 8 LEDs, 13.5 V - 0.45 W.
rear stop light: with 12 LEDs, 13.5 V - 2.8 W.
number plate light: 12 V - 5 W lamp.

Note

For the bulb replacement refer to paragraph "Replacing the bulbs".

Fuses

Electric components are protected by eleven fuses located in the fuse box. There are three spare fuses in every box. Above the solenoid starter there are two 30 A fuses, whereas on its sides there are two ABS fuses: a 25 A and a 30 A one.
The fuse boxes are located on the RH central side, under the RH side cover. Fuse box (A) is on the LH side, whereas fuse box (B) is on the RH side. To expose the fuses, lift the box protective covers. Mounting position and ampere capacity are marked on box cover. Refer to the table below to identify the circuits protected by the various fuses and their ratings.

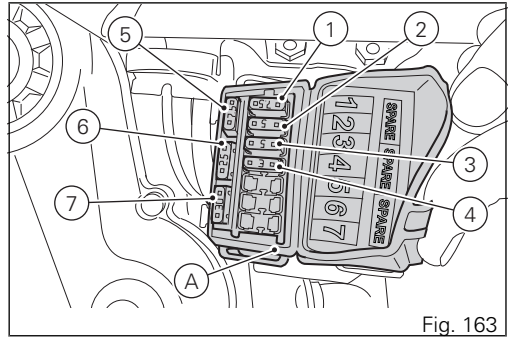

Fig. 163

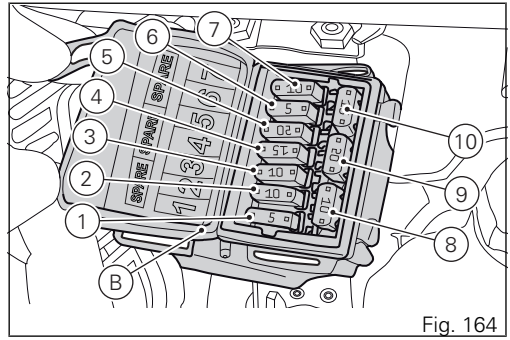

Fig. 164

Fuse box (A) key		
Pos	El. item	Rat.
1	Optional key	7.5 A
2	Alarm	5 A
3	Stop	5 A
4	Diagnostics	3 A
5	Spare	7.5 A
6	Spare	25 A
7	Spare	30 A

Fuse box (B) key		
Pos	El. item	Rat.
1	Lights	5 A
2	Instrument panel	10 A
3	Key 1	10 A
4	Key 2	15 A
5	Relay	20 A
6	Control unit	5 A
7	BBS	10 A
8	Spare	10 A
9	Spare	20 A
10	Spare	15 A

The two main fuses (C) are located on solenoid starter (D). Remove the fuse protection cap (E) to reach the fuses.
A blown fuse can be identified by breakage of the inner filament (F).
Near the solenoid starter there are two fuses: a 25 A (G) fuse and a 30 A (H) one.

Important

Switch the ignition key to OFF before replacing the fuse to avoid possible short-circuits.

Warning

Never use a fuse with a rating other than specified. Failure to observe this rule may damage the electric system or even cause fire.

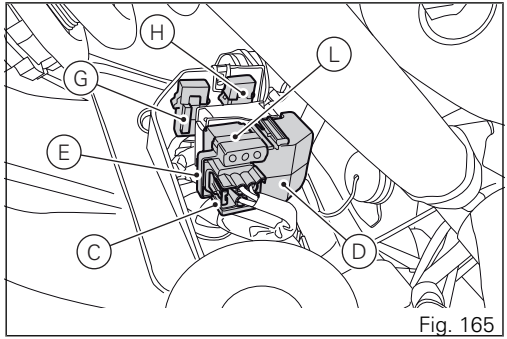

Fig. 165

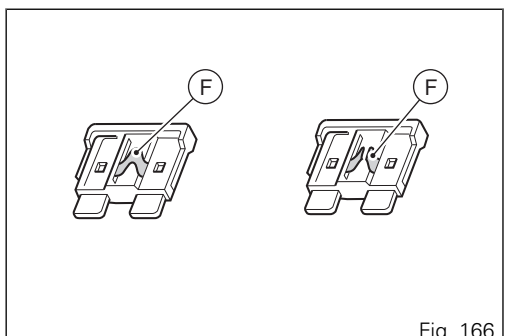

Fig. 166

Injection /electric system diagram key

1) Ignition system (ignition switch)
2) LH fan
3) RH fan
4) Generator
5) Rectifier
6) Solenoid starter
7) Battery
8) Wiring ground
9) Exhaust valve motor
10) ABS control unit
11) Front fuse box
12) Rear fuse box
13) Front speed sensor
14) Rear speed sensor
15) Self-diagnosis/DDA
16) Rear right turn indicator
17) Tail light
18) Rear left turn indicator
19) Number plate light
20) BBS
21) Alarm (optional)
22) Oil pressure sensor
23) Gear sensor
24) Side stand switch
25) Clutch switch
26) Timing rpm sensor
27) MAP sensor
28) Engine temperature
29) Ambient air temperature (TIA)
30) Horizontal exhaust lambda sensor
31) Vertical exhaust lambda sensor
32) Throttle handgrip position sensor (APS)
33) Horizontal injector
34) Vertical injector
35) Potentiometer motor / ride-by-wire (TPS/ ETV)
36) Secondary air actuator
37) Vertical coil
38) Horizontal coil
39) Fuel pump
40) Fuel pump relay
41) Injection power supply relay
42) Control unit 2
43) Control unit 1
44) Left-hand switch
45) Front left turn indicator
46) Horn
47) Air temperature sensor
48) Instrument panel
49) Rear stop light
50) Front stop light

51) Front right turn indicator
52) Headlight
53) Right-hand switch
54) Starter relay
55) Heated handgrip power supply
56) ABS fuses
57) Immobilizer
58) Starter motor

Wire colour coding

B Blue
W White
V Violet
Bk Black
Y Yellow
R Red
Lb Light blue
Gr Grey
G Green
Bn Brown
O Orange
P Pink

Note
The electric system wiring diagram is at the end of this manual.

Routine maintenance record

Routine maintenance record

KM	NAME DUCATI SERVICE	MILEAGE (KM)	DATE
1000			
15000			
30000			
45000			
60000			

Stampato 08/2015 Cod. 913.7.289.1A Rev.01

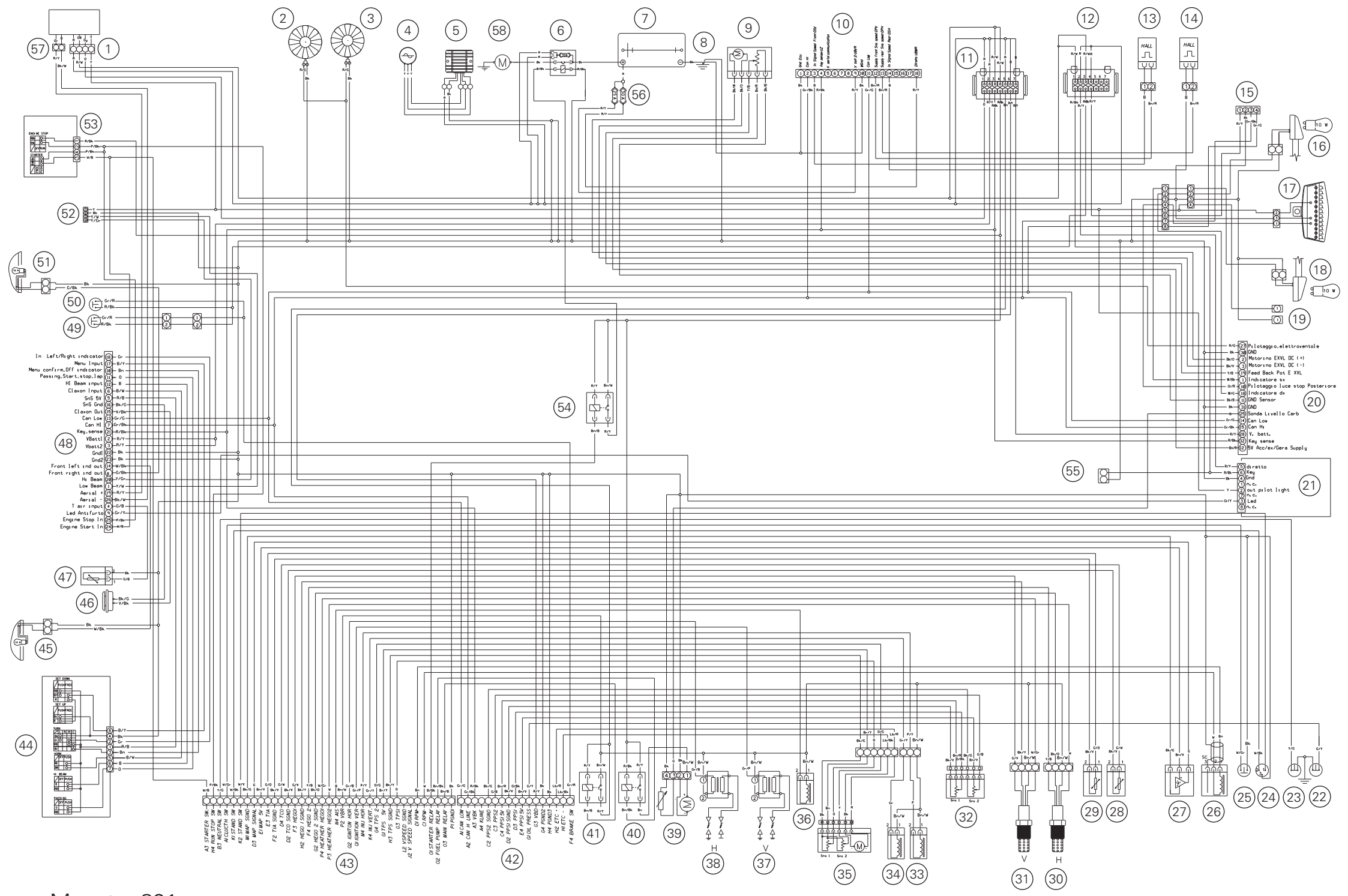
In Left/Right indicator
Menu Input
Menu confirm.Off indicator
Passing.Start.stop.lap
Hi Beam input
Claxon Input
SnS 5V
SnS Gnd
Claxon Out
Can Low
Can Hi
Key.sense
VBatt1
Vbatt2
Gnd1
Gnd2
Front left ind out
Front right ind out
Hi Beam
Low Beam
Aerial +
Aerial -
T air input
Led Antifurto
Engine Stop In
Engine Start In
Pilotaggio.elettroventole
GND
Motorino EXVL DC (+)
Motorino EXVL DC (-)
Feed Back Pot E XVL
Indicatore sx
Pilotaggio luce stop Posteriore
Indicatore dx
GND Sensor
GND
Sonda Livello Carb
Can Low
Can Hi
V. batt.
Key sense
5V Acc/ex/Gera Supply
diretto
Key
Gnd
n.c.
out pilot light
n.c.
Led
n.c.
HALL
HALL
10 W
10 W

Monster 821

cod. 913.7289.1A

Ducati Motor Holding spa
www.ducati.com

Via Cavalieri Ducati, 3
40132 Bologna, Italy
Ph. +39 051 6413111
Fax +39 051 406580

A Sole Shareholder Company
subject to the Management and
Coordination activities of AUDI AG